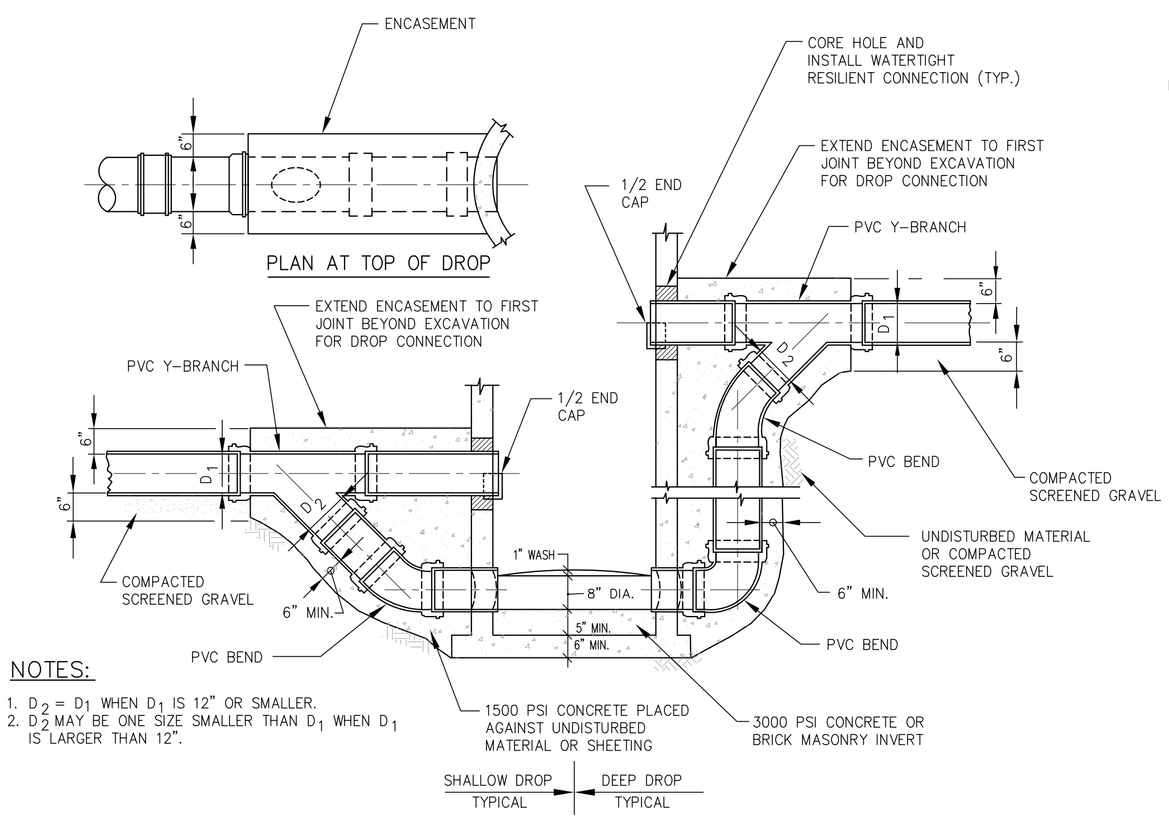

NOTES:

1. $D_2 = D_1$ WHEN D_1 IS 12" OR SMALLER.
2. D_2 MAY BE ONE SIZE SMALLER THAN D_1 WHEN D_1 IS LARGER THAN 12".

DROP INLETS FOR PVC PIPE SEWERS

NOT TO SCALE
2-1.4.1 (REV. 03-15-95)

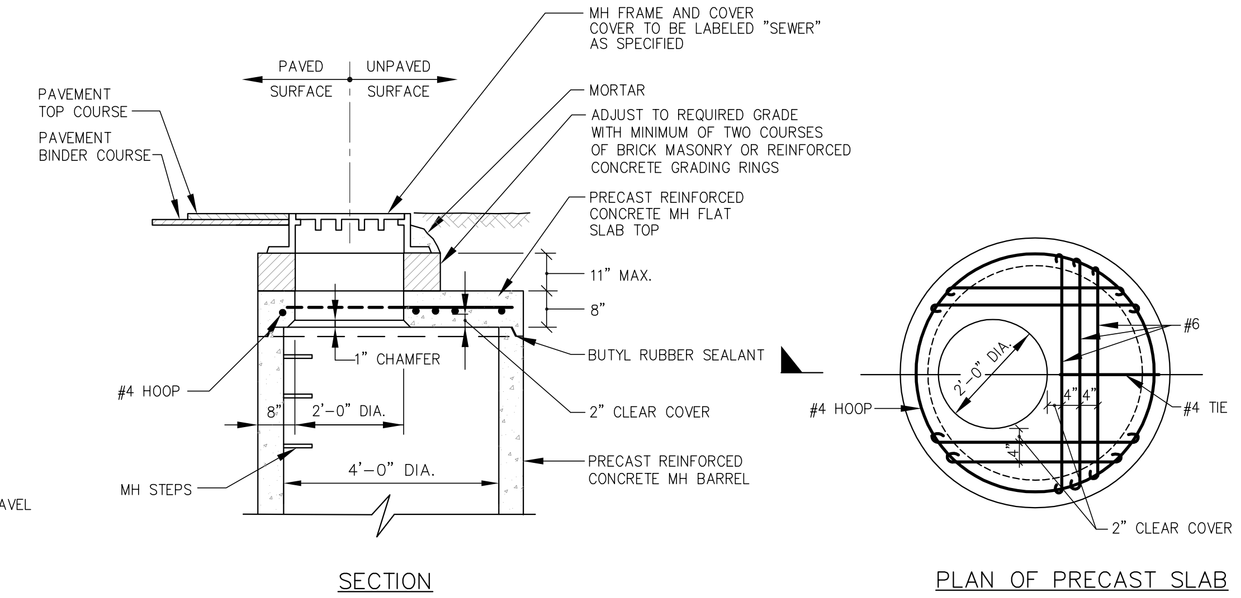

PRECAST FLAT SLAB TOP FOR SHALLOW MANHOLE

NOT TO SCALE
2-1.5.43 (REV. 03-15-95)

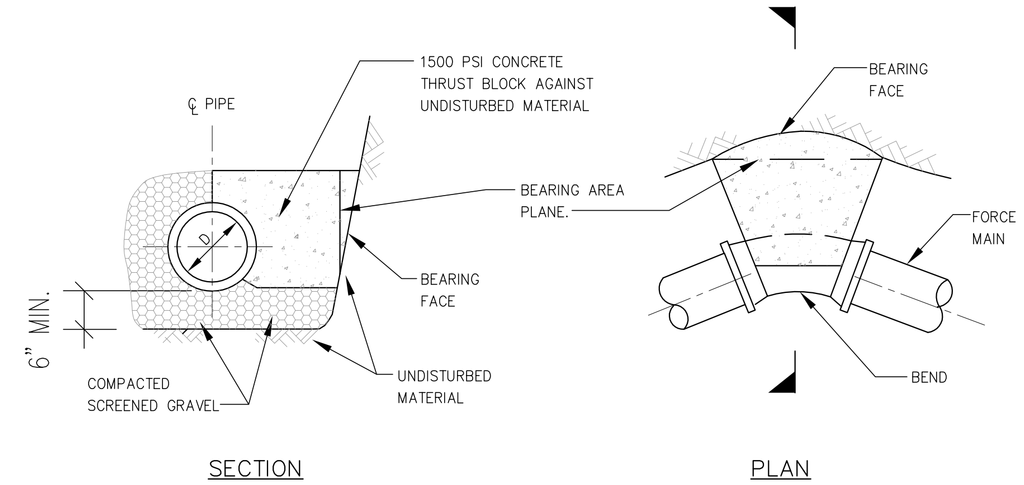

NOTES:

1. WHERE SO INDICATED ON PLANS, THE FORCE MAIN BENDS SHALL BE BACKED UP WITH A CONCRETE THRUST BLOCK BETWEEN THE PIPE AND UNDISTURBED MATERIAL.
2. REQUIRED BEARING AREA TO BE CALCULATED ON VERTICAL PLANE 90 DEG. TO RADIAL PLANE PASSING THROUGH MIDPOINT OF BEND.
3. MINIMUM BEARING AREA: 2.0 SQ.FT.
4. SEE PLANS FOR REQUIRED BEARING AREAS GREATER THAN MINIMUM.

FORCE MAIN THRUST BLOCK

NOT TO SCALE
2-1.6.1 (REV. 03-15-95)

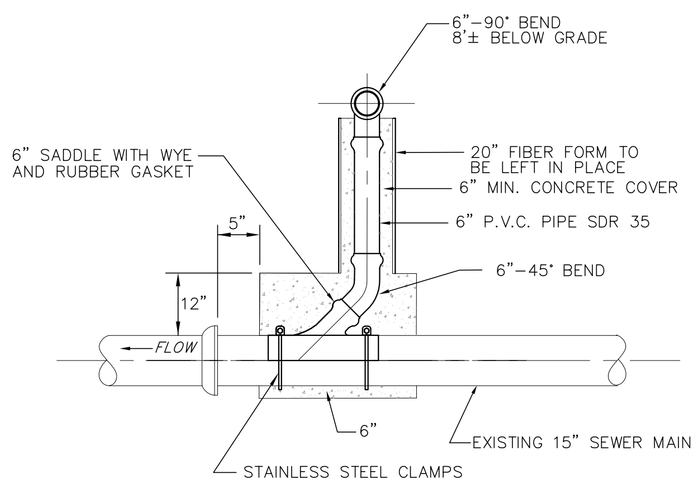

TYPICAL CHIMNEY DETAIL

NO SCALE

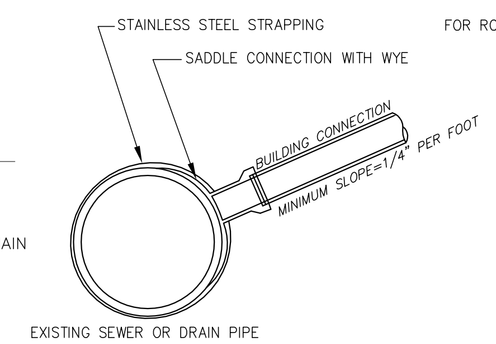

NOTES:

1. FULL PVC OR IRON SADDLE MAY BE USED TO CONNECT TO EXISTING PVC, CLAY, CONCRETE OR IRON PIPE.
2. SADDLES MUST HAVE RUBBER GASKETS AND SHALL BE TIGHTENED WITH STRAPS. SADDLES WILL NOT BE CEMENT ONTO THE PIPE.
3. FULL WYE CONNECTION FITTINGS MAY BE USED.
4. PIPE SHALL BE CUT TO CONFORM TO THE OPENING IN THE SADDLE.
5. CONNECTIONS DIRECTLY INTO THE EXISTING PIPE WITHOUT A SADDLE OR A FULL WYE FITTING ARE NOT ALLOWED.

SEWER SERVICE SADDLE CONNECTION

NO SCALE

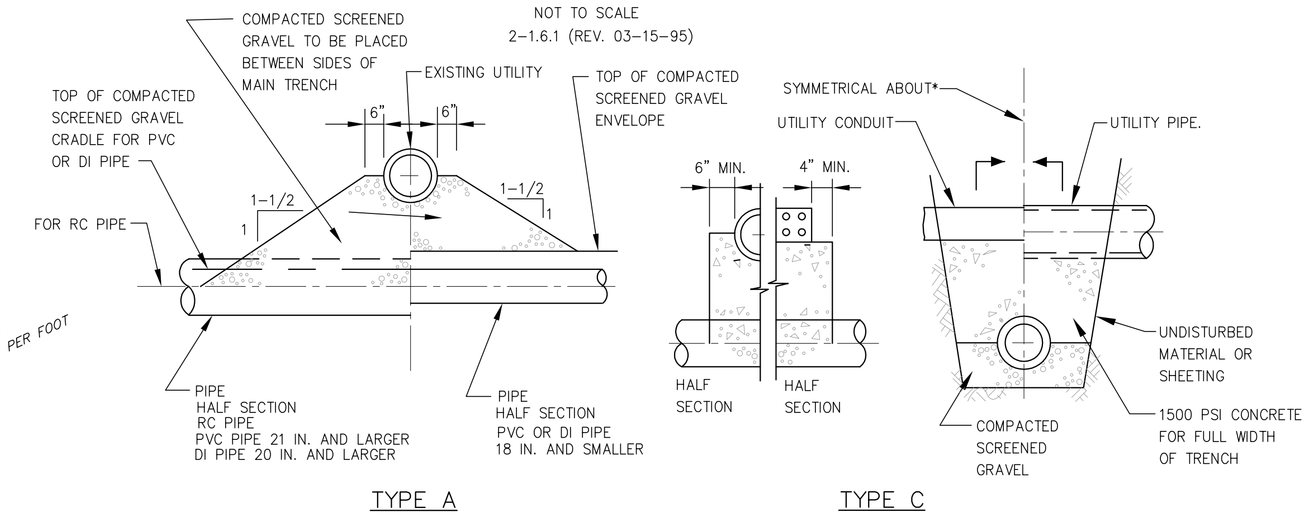

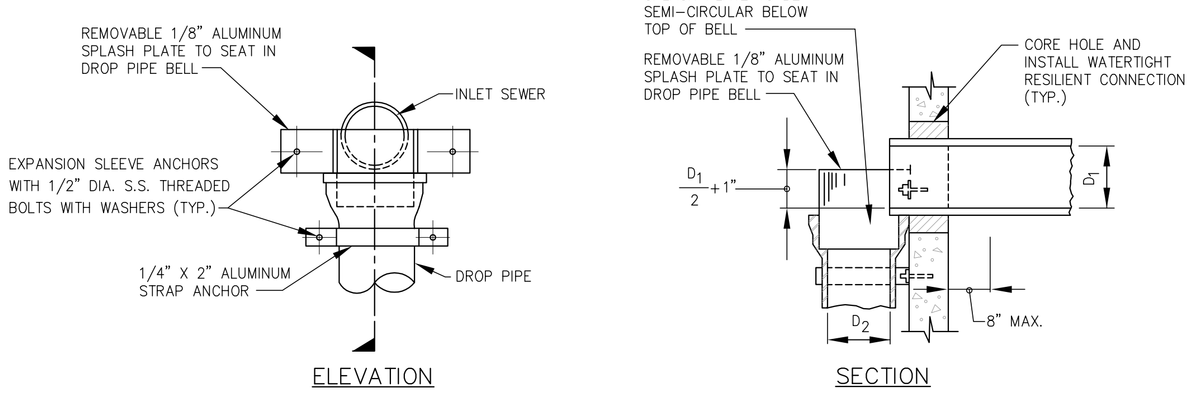

ALUMINUM SPLASH PLATE DETAIL

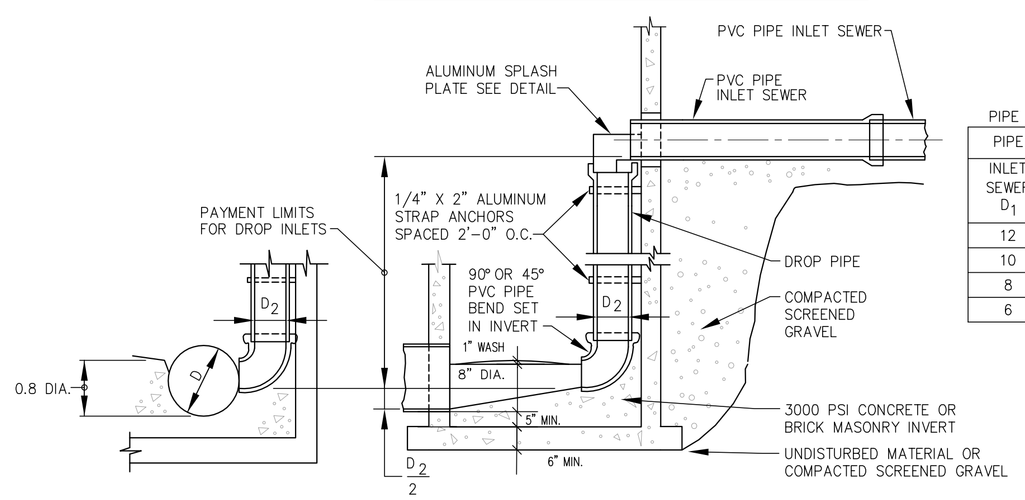

PIPE SIZE TABLE

PIPE SIZES (IN)	
INLET SEWER D_1	DROP PIPE D_2
12	10
10	8
8	8
6	6

INSIDE DROP INLETS FOR PVC PIPE SEWERS 12 INCH DIAMETER AND SMALLER

NOT TO SCALE
2-1.4.3 (REV. 03-15-95)

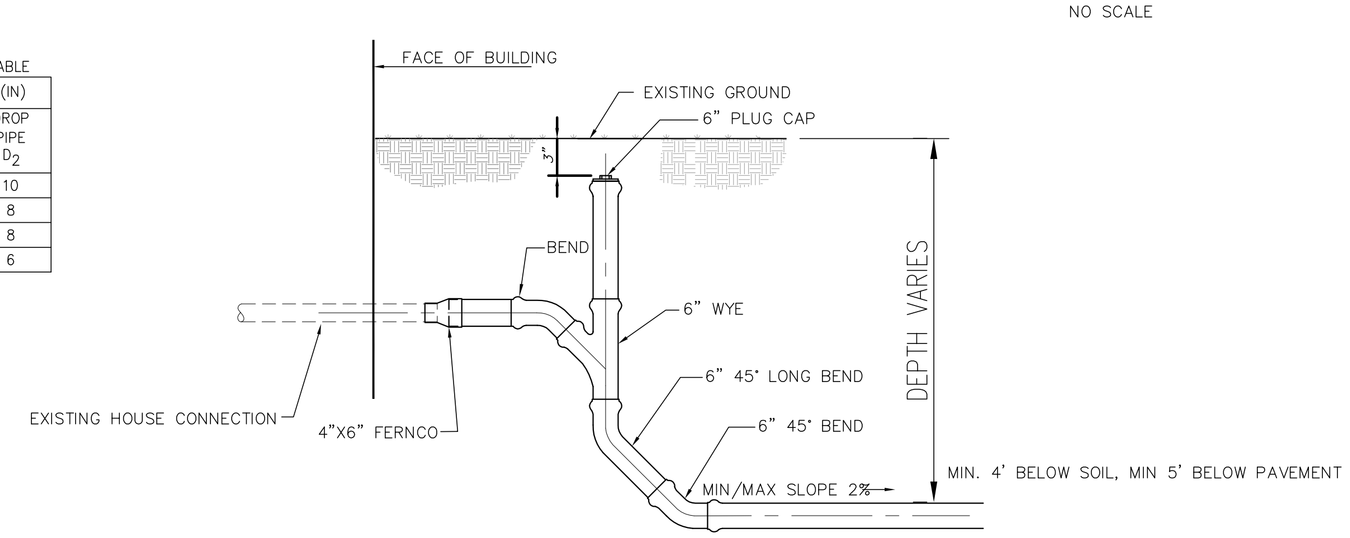

CLEAN OUT RISER FOR SHALLOW BUILDING CONNECTIONS

NO SCALE

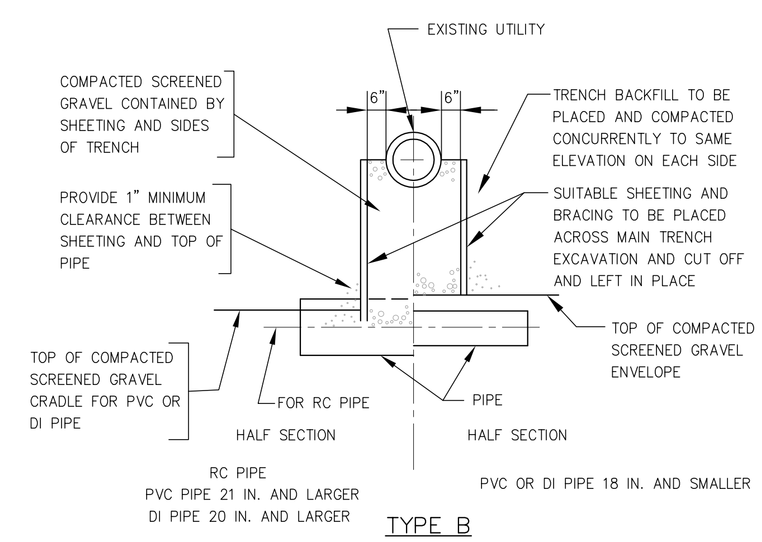

TYPICAL SUPPORTS FOR UTILITIES

NOT TO SCALE
2-1.8 (REV. 03-15-95)

DATE	REVISION	BY

TOWN OF LEXINGTON STANDARD DETAILS SEWER I

Town of Lexington ENGINEERING DIVISION

DRAWN BY: C.O.	DATE: APRIL 2012	SCALE: AS NOTED
DESIGNED BY: D.C.	CHECKED BY:	
APPROVED BY:		
CONTRACT NO. 12-71	SHEET NO. 8 OF 11	