# SITE SENSITIVE DEVELOPMENT DEFINITIVE PLAN SET

(IN ACCORDANCE WITH SECTION 135-6.9.3 OF THE LEXINGTON ZONING BYLAW)

# 75 OUTLOOK DRIVE, LEXINGTON, MA 02420

## DESIGN TEAM


CIVIL ENGINEERING:
PATRIOT ENGINEERING
35 BEDFORD STREET
SUITE 4
LEXINGTON, MA 02420
ATTN: MICHAEL NOVAK
PHONE: (978) 726-2654

LANDSCAPE ARCHITECTURE:
J. THOMA LAND DESIGN STUDIOS
141 HAGGETTS POND ROAD
ANDOVER, MA 01810
ATTN: JEFF THOMA
PHONE: (978) 409-9815

SURVEY:
RJ O'CONNELL & ASSOCIATES, INC.
80 MONTVALE AVENUE
SUITE 201
STONEHAM, MA 02180
ATTN: MATT LOWRY
PHONE: (781) 279-0180


LOCUS MAP
SCALE: 1" = 200'

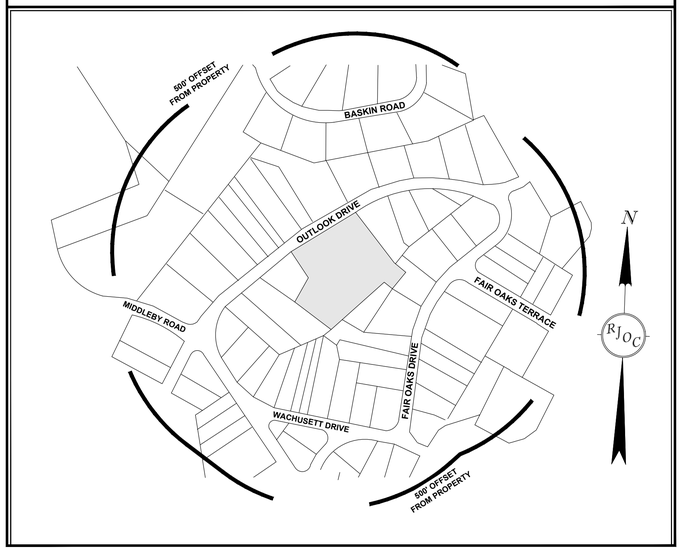


## DRAWING INDEX

| DRAWING DATE | LAST REVISION | DRAWING | DRAWING DESCRIPTION |
|---|---|---|---|
| 11/15/2021 | - | SSD-0 | COVER SHEET & LOCUS CONTEXT MAP |
| 11/15/2021 | - | SSD-1 | RECORD CONDITIONS PLAN |
| 11/15/2021 | - | SSD-2 | SITE ANALYSIS MAP |
| 11/15/2021 | - | SSD-3 | PROPERTY RIGHTS PLAN OF LAND |
| 11/15/2021 | - | SSD-4 | SITE CONSTRUCTION PLAN |
| 11/15/2021 | - | SSD-5 | SITE UTILITY PLAN |
| 11/15/2021 | - | SSD-6 | SITE LANDSCAPE PLAN |
| 11/15/2021 | - | SSD-7 | SITE DETAILS |
| 11/15/2021 | - | SSD-8 | SITE DETAILS |
| 11/15/2021 | - | SSD-9 | SITE DETAILS |
| 11/15/2021 | - | SSD-10 | PROOF PLAN |

PATRIOT Engineering


PATRIOT Engineering
*35 BEDFORD STREET, SUITE 4*
*LEXINGTON, MASSACHUSETTS 02420*
*T: (978) 726-2654*
*www.patriot-eng.com*


| MAP - LOT | ADDRESS | OWNER NAME |
|---|---|---|
| 42-16 | MIDDLEBY RD | TOWN OF LEXINGTON |
| 33-247 | PROSPECT HILL RD | TOWN OF LEXINGTON |
| 41-36 | FAIR OAKS TER | VON HOYNINGEN-HUENE NIKOLAUS C & VON |
| 33-209 | FAIR OAKS TER | MILLER MARANDA J |
| 33-205 | FAIR OAKS DR | FEHM MICHAEL |
| 33-193 | WACHUSETT DR | SHAW PHILLIP R & SANDRA J |
| 41-64 | 102 OUTLOOK DR | SAGER ALAN |
| 41-32 | 103 OUTLOOK DR | JENSEN KLAVS F & JENSEN CHRISTINE B TRS |
| 41-56 | OUTLOOK DR | WILLIAMS JOHN R & WILLIAMS BARBARA A TRS |
| 41-46 | OUTLOOK DR | TOWN OF LEXINGTON |
| 33-199 | 12 FAIR OAKS DR | THIBODEAU PAUL |
| 33-248 | 2 WACHUSETT CIR | MINUTTI PAUL G |
| 41-37 | 16 FAIR OAKS TER | XIAO LANLAN |
| 33-214 | 17 FAIR OAKS DR | BROOKS CHRISTOPHER S |
| 33-204 | 22 FAIR OAKS DR | FEHM MICHAEL |
| 41-30 | 17 LORING RD | BLOOM BURTON H |
| 33-210 | 15 FAIR OAKS TER | KEVIN WILCZEWSKI FAMILY TRUST |
| 33-245 | 42 WACHUSETT DR | MARELLI BENEDETTO |
| 33-201A | 18 FAIR OAKS DR | BROWN DENNIS A |
| 41-129 | 34 FAIR OAKS DR | MOORE MICHAEL J & ELLEN M |
| 33-217 | 37 WACHUSETT DR | ROY CHRISTOPHER B |
| 41-77 | 45 BASKIN RD | MARASCA ROBERT A |
| 33-243A | 38 WACHUSETT DR | REYNOLDS BRADLEY S |
| 41-34 | 41 FAIR OAKS DR | GU HONG |
| 41-78 | 43 BASKIN RD | GRIFFITH STANLEY N |
| 41-82 | 46 BASKIN RD | CHANG KUANG CHOU |
| 33-195 | 47 WACHUSETT DR | LOWELL HARVEY D |
| 41-83 | 48 BASKIN RD | JOHN XIAOFENG ZHU TRUST - 2002 |
| 33-249 | 3 WACHUSETT CIR | CORMIER PHILIP G |
| 33-219 | 35 WACHUSETT DR | ATKINSON CHARLES N & DELILAH C |
| 33-212 | 25 FAIR OAKS DR | BAKER CATHERINE L & HERBERT P TRUSTEES |
| 33-144 | 49 OUTLOOK DR | MONTGOMERY ALBERT G & DEE ANN |
| 41-50 | 67 OUTLOOK DR | BERG MATTHEW & SARA |
| 41-54 | 68 OUTLOOK DR | RYMES MARGARET A L/E & SMITH JULIE A |
| 33-216 | 7 FAIR OAKS DR | MARTINEZ FAMILY REVOCABLE TRUST |
| 33-185 | 72 PROSPECT HILL RD | KERAMATY HAMID |
| 41-73 | 53 BASKIN RD | SCHAPFEL FRANK T |
| 33-196 | 45 WACHUSETT DR | HENOCH GARY |
| 41-57 | 72 OUTLOOK DR | SAVIR RAPHAEL L |
| 41-33 | 43 FAIR OAKS DR | FREITAG DORIS C TRUSTEE |
| 41-45 | 44 FAIR OAKS DR | TRAJMAN DAN S & DORIT |
| 41-59 | 80 OUTLOOK DR | FAN LIANCHUN |
| 33-191 | 61 PROSPECT HILL RD | KVAAL ANDREW R |
| 33-183 | 64 PROSPECT HILL RD | LING YIHUI |
| 33-186 | 65 OUTLOOK DR | VANDERHOOFT DAVID S & VANERHOOFT SHANNON |
| 41-84 | 54 BASKIN RD | CHAIT MANYA R |
| 41-35 | 6 FAIR OAKS TER | CHIM GUNG-WEI |
| 33-189 | 69 PROSPECT HILL RD | WEISBERG ROBERT J |
| 33-215 | 9 FAIR OAKS DR | LI XI |
| 41-74 | 51 BASKIN RD | WALLACE DEBRA J |
| 42-1 | 52 LINCOLN ST | TOWN OF LEXINGTON |
| 33-181A | 58 PROSPECT HILL RD | FISHER DOUGLAS A |
| 33-187 | 59 OUTLOOK DR | CEMENSKA MARCI J |
| 33-142A | 54 OUTLOOK DR | LUM VICTOR |
| 33-184 | 66 PROSPECT HILL RD | BEARD VIVIAN C |
| 41-53 | 66 OUTLOOK DR | COSTELLO JOSEPH E |
| 41-61 | 90 OUTLOOK DR | MACQUEEN DUNCAN A JR & MACQUEEN ELEANOR |
| 33-197 | 43 WACHUSETT DR | LIBBY BRAD W |
| 41-76 | 47 BASKIN RD | HEIDARI SANAZ |
| 41-52 | 60 OUTLOOK DR | ENGELWARD BEVIN PAGE |
| 33-190 | 65 PROSPECT HILL RD | MAYES DAVID H |
| 41-60 | 88 OUTLOOK DR | PARKHURST, BENJAMIN EDWARD |
| 41-49B | 91 OUTLOOK DR | PATEL JIGAR & SEJAL |
| 41-48 | 93 OUTLOOK DR | ROY SWAPAN & LIPIKA |
| 41-62 | 96 OUTLOOK DR | EDWARDS ROBERT E & EDWARDS FRA |
| 33-211 | 7 FAIR OAKS TER | LANG PHILIPP |
| 41-55 | 70 OUTLOOK DR | WILLIAMS JOHN R & WILLIAMS BARBARA A TRS |
| 33-188 | 75 PROSPECT HILL RD | GATZKE RONALD D & GATZKE LINDA M TRS |
| 41-63 | 98 OUTLOOK DR | CULYER GARY & FISHER DEBORAH TRUSTEES |
| 33-246 | 4 WACHUSETT CIR | GILLMOR REGINALD B & PLUNKETT LINDA TRS |
| 41-44 | 40 FAIR OAKS DR | HEAD GREGORY E TRUSTEE |
| 41-47 | 97 OUTLOOK DR | DALWIN WARREN BRUCE |
| 41-81 | 42 BASKIN RD | HURWITZ CHARLES E |
| 33-213 | 19 FAIR OAKS DR | GREEN ROBERT W |
| 33-192 | 51 WACHUSETT DR | SHAW PHILLIP R & SANDRA J |
| 33-194 | WACHUSETT DR | LOWELL HARVEY D |
| 33-200 | 14 FAIR OAKS DR | FRIED RICHARD P |
| 41-51A | 58 OUTLOOK DR | CALEB P HAL 2013 REVOCABLE TRUST |
| 33-198 | 6 FAIR OAKS DR | TWEEDDALE JOHN R |
| 42-17A | 170 MIDDLEBY RD | HURLEY MARYBETH & HURLEY JILL & HURLEY |
| 33-182 | 62 PROSPECT HILL RD | FRENCH ANDREW H |
| 41-58 | 78 OUTLOOK DR | KRAWCZYK JOHN J |
| 33-218 | 35A WACHUSETT DR | OSSMAN ROBERT L |
| 33-244 | 40 WACHUSETT DR | LAVALLE BRIAN |
| 41-79-79A | 41 BASKIN RD | ROCKEFELLER GODFREY ANDERSON JR |
| 33-141 | 48 OUTLOOK DR | FAINELLI DOUGLAS L |
| 41-75 | 49 BASKIN RD | KONUNENBERG ARDJAN G |
| 41-39A | 24 FAIR OAKS DR | CHARNOCK JOSEPH |

PREPARED FOR:

ALPHA ECHO 75 OUTLOOK LLC
30 WHIPPLE ROAD
LEXINGTON, MA 02420
PHONE: 781-862-5506

OWNER:

ALPHA ECHO 75 OUTLOOK LLC
30 WHIPPLE ROAD
LEXINGTON, MA 02420
PHONE: 781-862-5506
DEED BOOK: 77840 / PAGE: 85

*NOTES:*

1. THE INFORMATION DEPICTED ON THIS PLAN HAS BEEN COMPILED FROM THE TOWN OF LEXINGTON ONLINE GEOGRAPHIC INFORMATION SYSTEM.
2. LAND USE WITHIN 500 FEET OF THE SUBJECT PROPERTY IS PRIMARILY SINGLE FAMILY DWELLINGS.

## GOVERNMENT/UTILITY CONTACTS

**PLANNING DEPARTMENT:**
1625 MASSACHUSETTS AVENUE
LEXINGTON, MA 02420
PHONE: 781-698-4560
ATTN: AMANDA LOOMIS, PLANNING DIRECTOR

**BUILDING DEPARTMENT:**
1625 MASSACHUSETTS AVENUE
GROUND LEVEL, TOWN OFFICE BUILDING
LEXINGTON, MA 02420
PHONE: 781-698-4530
ATTN: JIM KELLY, BUILDING COMMISSIONER

**FIRE DEPARTMENT:**
45 BEDFORD STREET
LEXINGTON, MA 02420
PHONE: 781-862-0271
ATTN: TIM FLAHERTY, ASSISTANT FIRE CHIEF

**ASSESSOR'S OFFICE:**
1625 MASSACHUSETTS AVENUE
LEXINGTON, MA 02420
PHONE: 781-698-4578
ATTN: ROBERT LENT, DIRECTOR OF ASSESSING

**ENGINEERING DEPARTMENT:**
201 BEDFORD STREET ROOM 202
LEXINGTON, MA 02420
PHONE: 781-274-8300 EXT. 8305
ATTN: JOHN LIVSEY, TOWN ENGINEER

**POLICE DEPARTMENT:**
1575 MASSACHUSETTS AVENUE
LEXINGTON, MA 02420
PHONE: 781-862-1212
ATTN: MICHAEL MCLEAN, INTERIM POLICE CHIEF

**DEPARTMENT OF PUBLIC WORKS:**
201 BEDFORD STREET
LEXINGTON, MA 02420
PHONE: 781-274-8300
ATTN: DAVID J. PINSONNEAULT, DIRECTOR OF DPW

**HEALTH DEPARTMENT:**
1625 MASSACHUSETTS AVENUE
LEXINGTON, MA 02420
PHONE: 781-698-4533
ATTN: ALICIA MCCARTIN, HEALTH AGENT

DRAWING NUMBER:
**SSD-0**

PROJECT NUMBER:
21034

Drawing name: G:\MA\Lexington\Novak\75 Outlook Dr\Main\21034_SSD-0 Cover Sheet.dwg
Nov 15, 2021 - 13:59pm

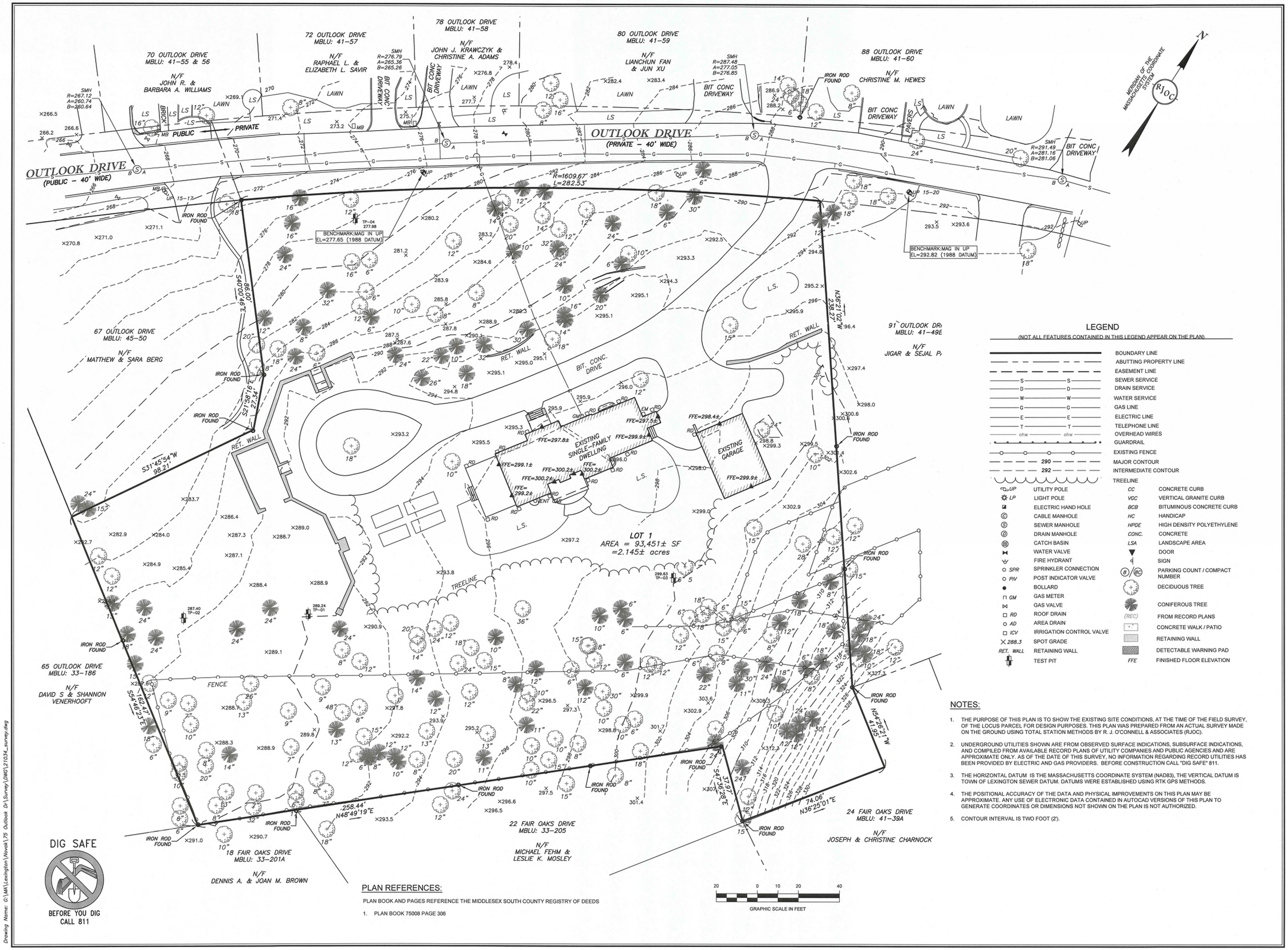


## LEGEND

(NOT ALL FEATURES CONTAINED IN THIS LEGEND APPEAR ON THE PLAN)

| | |
|---|---|
| | BOUNDARY LINE |
| | ABUTTING PROPERTY LINE |
| | EASEMENT LINE |
| S | SEWER SERVICE |
| D | DRAIN SERVICE |
| W | WATER SERVICE |
| G | GAS LINE |
| E | ELECTRIC LINE |
| T | TELEPHONE LINE |
| ohw | OVERHEAD WIRES |
| | GUARDRAIL |
| | EXISTING FENCE |
| 290 | MAJOR CONTOUR |
| 292 | INTERMEDIATE CONTOUR |
| | TREELINE |
| UP | UTILITY POLE |
| LP | LIGHT POLE |
| | ELECTRIC HAND HOLE |
| | CABLE MANHOLE |
| | SEWER MANHOLE |
| | DRAIN MANHOLE |
| | CATCH BASIN |
| | WATER VALVE |
| | FIRE HYDRANT |
| SPR | SPRINKLER CONNECTION |
| PIV | POST INDICATOR VALVE |
| | BOLLARD |
| GM | GAS METER |
| | GAS VALVE |
| RD | ROOF DRAIN |
| AD | AREA DRAIN |
| ICV | IRRIGATION CONTROL VALVE |
| 288.3 | SPOT GRADE |
| RET. WALL | RETAINING WALL |
| | TEST PIT |
| CC | CONCRETE CURB |
| VGC | VERTICAL GRANITE CURB |
| BCB | BITUMINOUS CONCRETE CURB |
| HC | HANDICAP |
| HPDE | HIGH DENSITY POLYETHYLENE |
| CONC. | CONCRETE |
| LSA | LANDSCAPE AREA |
| | DOOR |
| | SIGN |
| B / BC | PARKING COUNT / COMPACT NUMBER |
| | DECIDUOUS TREE |
| | CONIFEROUS TREE |
| (REC) | FROM RECORD PLANS |
| | CONCRETE WALK / PATIO |
| | RETAINING WALL |
| | DETECTABLE WARNING PAD |
| FFE | FINISHED FLOOR ELEVATION |

## NOTES:

1. THE PURPOSE OF THIS PLAN IS TO SHOW THE EXISTING SITE CONDITIONS, AT THE TIME OF THE FIELD SURVEY, OF THE LOCUS PARCEL FOR DESIGN PURPOSES. THIS PLAN WAS PREPARED FROM AN ACTUAL SURVEY MADE ON THE GROUND USING TOTAL STATION METHODS BY R. J. O'CONNELL & ASSOCIATES (RJOC).
2. UNDERGROUND UTILITIES SHOWN ARE FROM OBSERVED SURFACE INDICATIONS, SUBSURFACE INDICATIONS, AND COMPILED FROM AVAILABLE RECORD PLANS OF UTILITY COMPANIES AND PUBLIC AGENCIES AND ARE APPROXIMATE ONLY. AS OF THE DATE OF THIS SURVEY, NO INFORMATION REGARDING RECORD UTILITIES HAS BEEN PROVIDED BY ELECTRIC AND GAS PROVIDERS. BEFORE CONSTRUCTION CALL "DIG SAFE" 811.
3. THE HORIZONTAL DATUM IS THE MASSACHUSETTS COORDINATE SYSTEM (NAD83), THE VERTICAL DATUM IS TOWN OF LEXINGTON SEWER DATUM. DATUMS WERE ESTABLISHED USING RTK GPS METHODS.
4. THE POSITIONAL ACCURACY OF THE DATA AND PHYSICAL IMPROVEMENTS ON THIS PLAN MAY BE APPROXIMATE. ANY USE OF ELECTRONIC DATA CONTAINED IN AUTOCAD VERSIONS OF THIS PLAN TO GENERATE COORDINATES OR DIMENSIONS NOT SHOWN ON THE PLAN IS NOT AUTHORIZED.
5. CONTOUR INTERVAL IS TWO FOOT (2').

## PLAN REFERENCES:

PLAN BOOK AND PAGES REFERENCE THE MIDDLESEX SOUTH COUNTY REGISTRY OF DEEDS

1. PLAN BOOK 75008 PAGE 306

DIG SAFE

BEFORE YOU DIG CALL 811

Drawing Name: G:\MA\Lexington\Novak\75 Outlook Dr\Survey\DWG\21034_survey.dwg

RJOC

| NO. | REVISION | DATE |
|---|---|---|
| | | |

Record Owner:
ALPHA ECHO 75 OUTLOOK, LLC
30 WHIPPLE ROAD
LEXINGTON, MA 02420
BK 75008 / PG 306

Location:
MBLU: 41-49A
75 OUTLOOK DRIVE
LEXINGTON, MA

PREPARED BY:
**RJO'CONNELL & ASSOCIATES, INC.**
CIVIL ENGINEERS, SURVEYORS & LAND PLANNERS
80 MONTVALE AVENUE, SUITE 201 STONEHAM, MA 02180
PHONE: 781.279.0180 RJOCONNELL.COM

PREPARED FOR:

ALPHA ECHO
75 OUTLOOK, LLC
30 WHIPPLE ROAD
LEXINGTON, MA 02420

PROJECT NAME:

75 OUTLOOK DRIVE
LEXINGTON, MA

THIS PLAN IS THE RESULT OF AN ON THE GROUND SURVEY PERFORMED BETWEEN 05/20/2021 AND 07/07/2021.

COMMONWEALTH OF MASSACHUSETTS
MATTHEW LOWRY
No. 49025
PROFESSIONAL LAND SURVEYOR

PROFESSIONAL LAND SURVEYOR FOR RJ O'CONNELL & ASSOCIATES, INC — DATE 7/13/2021

| | |
|---|---|
| DRAWN BY: | RJK |
| REVIEWED BY: | ML |
| SCALE: | 1" = 20' |
| FIELD CREW: | TDB / CJR / RJK / DML / JEO |
| FIELD BOOK: | FIELD BOOK 41 / PG 104 |
| DATE: | 07/13/2021 |

DRAWING NAME:

EXISTING CONDITIONS PLAN

DRAWING NUMBER:

**SSD-2**

PROJECT NUMBER: 21034

Copyright © 2021 by R.J. O'Connell & Associates, Inc.

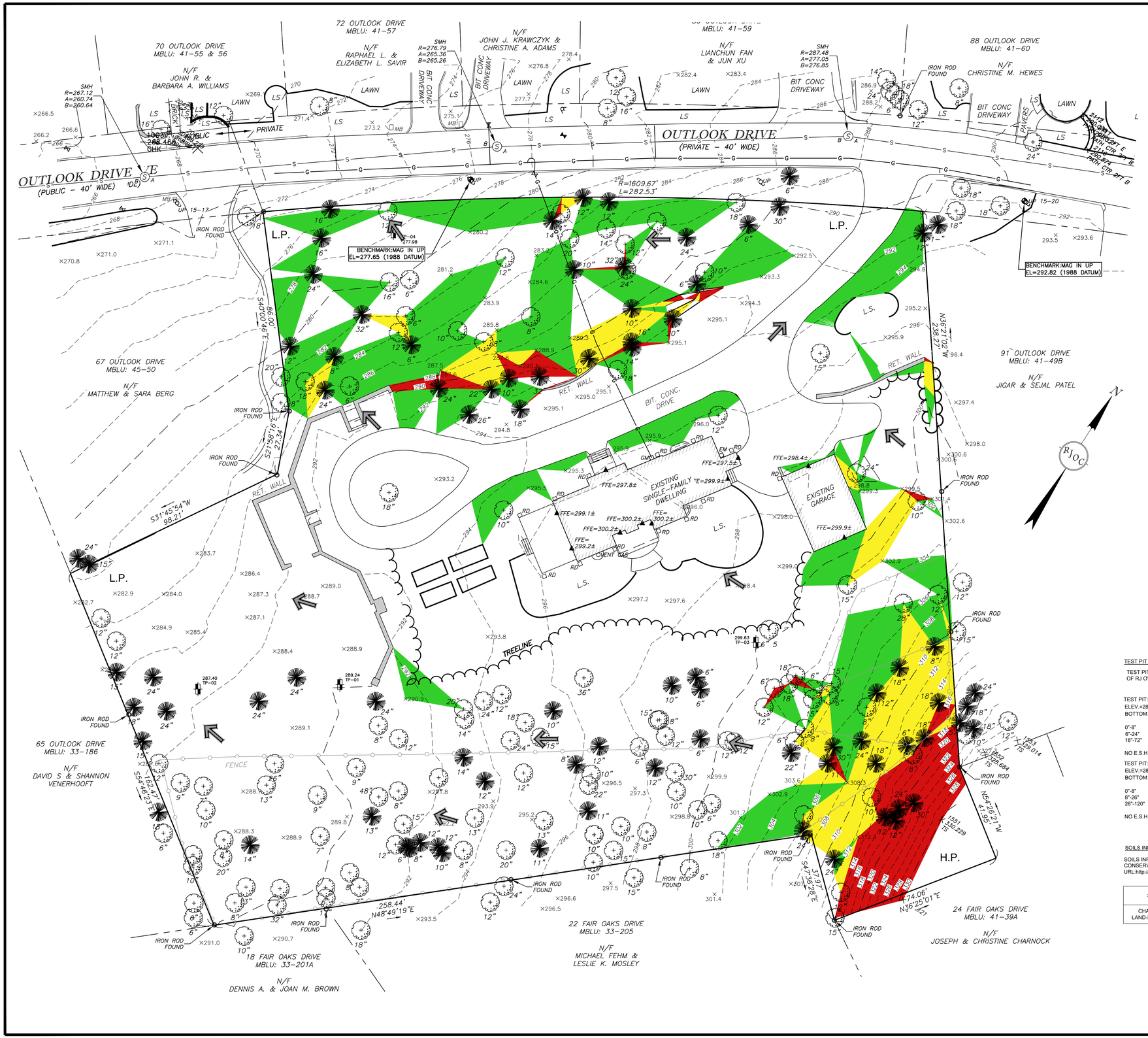


## EXISTING CONDITIONS LEGEND

(NOT ALL FEATURES CONTAINED IN THIS LEGEND APPEAR ON THE PLAN)

| | |
|---|---|
| | BOUNDARY LINE |
| | ABUTTING PROPERTY LINE |
| | EASEMENT LINE |
| S S | SEWER SERVICE |
| D D | DRAIN SERVICE |
| W W | WATER SERVICE |
| G G | GAS LINE |
| E E | ELECTRIC LINE |
| T T | TELEPHONE LINE |
| ohw ohw | OVERHEAD WIRES |
| | GUARDRAIL |
| | EXISTING FENCE |
| 290 | MAJOR CONTOUR |
| 292 | INTERMEDIATE CONTOUR |
| | TREELINE |
| UP | UTILITY POLE |
| LP | LIGHT POLE |
| | ELECTRIC HAND HOLE |
| | CABLE MANHOLE |
| | SEWER MANHOLE |
| | DRAIN MANHOLE |
| | CATCH BASIN |
| | WATER VALVE |
| | FIRE HYDRANT |
| SPR | SPRINKLER CONNECTION |
| PIV | POST INDICATOR VALVE |
| | BOLLARD |
| GM | GAS METER |
| | GAS VALVE |
| RD | ROOF DRAIN |
| AD | AREA DRAIN |
| ICV | IRRIGATION CONTROL VALVE |
| 288.3 | SPOT GRADE |
| RET. WALL | RETAINING WALL |
| | TEST PIT |
| CC | CONCRETE CURB |
| VGC | VERTICAL GRANITE CURB |
| BCB | BITUMINOUS CONCRETE CURB |
| HC | HANDICAP |
| HPDE | HIGH DENSITY POLYETHYLENE |
| CONC. | CONCRETE |
| LSA | LANDSCAPE AREA |
| | DOOR |
| | SIGN |
| B / BC | PARKING COUNT / COMPACT NUMBER |
| | DECIDUOUS TREE |
| | CONIFEROUS TREE |
| (REC) | FROM RECORD PLANS |
| | CONCRETE WALK / PATIO |
| | RETAINING WALL |
| | DETECTABLE WARNING PAD |
| FFE | FINISHED FLOOR ELEVATION |

## SITE ANALYSIS LEGEND:

| | |
|---|---|
| H.P. | HIGH POINT |
| L.P. | LOW POINT |
| | DIRECTION OF OVERLAND FLOW |
| ESHGW | ESTIMATED SEASONAL HIGH GROUND WATER |
| | 15-25% SLOPES |
| | 25-40% SLOPES |
| | >40% SLOPES |

## TEST PIT INFORMATION

TEST PITS WERE PERFORMED BY MICHAEL CAPACHIETTI OF RJ O'CONNELL & ASSOCIATES, ON 08/23/2021.

TEST PIT: TP-01
ELEV.=289.2±
BOTTOM OF HOLE ELEV.=283.2

| | |
|---|---|
| 0"-8" | TOPSOIL |
| 6"-24" | B: LOAMY SAND |
| 16"-72" | HORIZON C: LOAMY SAND W/ COBBLES |

NO E.S.H.G.W. OBSERVED

TEST PIT: TP-02
ELEV.=287.4±
BOTTOM OF HOLE ELEV.=277.4

| | |
|---|---|
| 0"-8" | TOPSOIL |
| 8"-26" | B: LOAMY SAND |
| 26"-120" | HORIZON C: LOAMY SAND W/ COBBLES |

NO E.S.H.G.W. OBSERVED

TEST PIT: TP-03
ELEV.=299.6±
BOTTOM OF HOLE ELEV.=293.1

| | |
|---|---|
| 0"-12" | Ap |
| 12"-24" | B: LOAMY SAND |
| 24"-78" | HORIZON C: LOAMY SAND W/ COBBLES |

NO E.S.H.G.W. OBSERVED

TEST PIT: TP-04
ELEV.=278.0±
BOTTOM OF HOLE ELEV.=272.0

| | |
|---|---|
| 0"-6" | Ap |
| 6"-24" | B: LOAMY SAND |
| 24"-72" | HORIZON C: LOAMY SAND W/ COBBLES |

NO E.S.H.G.W. OBSERVED

## SOILS INFORMATION:

SOILS INFORMATION DERIVED FROM THE USDA NATURAL RESOURCES CONSERVATION SERVICE SOIL SURVEY OF MIDDLESEX COUNTY, MASSACHUSETTS, URL:http://websoilsurvey.nrcs.usda.gov.

| SOIL TYPE | HYDROLOGIC SOIL GROUP | TYPICAL DEPTH TO ESHGW |
|---|---|---|
| CHARLTON-URBAN LAND-HOLLIS COMPLEX | GROUP A | > 80" |

20 0 10 20 40
GRAPHIC SCALE IN FEET

REVISIONS

| DATE | DESCRIPTION | BY |
|---|---|---|
| | | |

COMMONWEALTH OF MASSACHUSETTS
MICHAEL J. NOVAK
CIVIL
No. 50696
REGISTERED PROFESSIONAL ENGINEER

# 75 OUTLOOK DRIVE
## SITE ANALYSIS PLAN
LOCATED IN
LEXINGTON, MASSACHUSETTS
(SOUTHERN MIDDLESEX COUNTY)
PREPARED FOR
**ALPH ECHO – 75 OUTLOOK, LLC.**


PATRIOT Engineering
35 BEDFORD STREET, SUITE 4
LEXINGTON, MASSACHUSETTS 02420
T: (978) 726-2654
www.patriot-eng.com


DESIGNED BY: M. CAPACHIETTI
CHECKED BY: M. NOVAK

DATE: 11/15/2021
SCALE: 1"=20'
SHEET No. SSD-2
PROJECT No. 21034

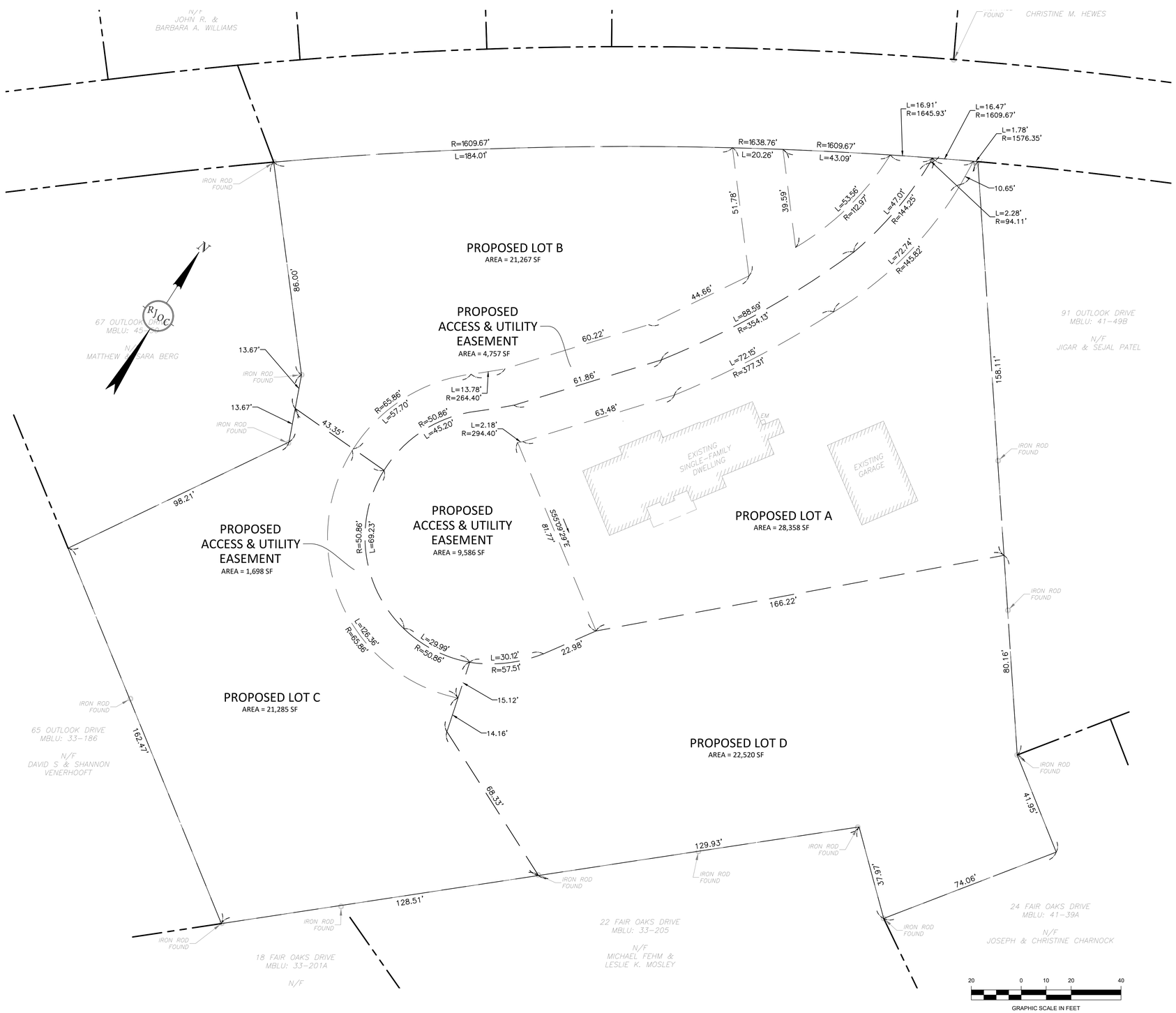


## NOTES:

1. THE SOLE PURPOSE OF THIS PLAN SET IS TO COMPLY WITH SECTION 135-6.9.3 OF THE TOWN OF LEXINGTON ZONING BY LAW.
2. THE TOPOGRAPHY, SITE DETAIL & SURFACE IMPROVEMENTS DEPICTED HEREON WERE OBTAINED FROM AN ONSITE SURVEY PERFORMED BY RJ O'CONNELL & ASSOCIATES, INC.
3. THE SUBJECT PROPERTY DEPICTED IS LOCATED WITHIN THE RS ZONING DISTRICT.
4. THE SUBJECT PROPERTY IS DEPICTED AS LOT 49A ON THE TOWN OF LEXINGTON ASSESSOR'S MAP 41.
5. THIS PLAN DOES NOT SHOW ANY UNRECORDED OR UNWRITTEN EASEMENTS WHICH MAY EXIST.
6. THE LOCUS PROPERTY IS LOCATED IN FLOOD ZONE X (UNSHADED), AREAS DETERMINED TO BE OUTSIDE THE 0.2% ANNUAL CHANCE FLOODPLAIN, PER FEMA FLOOD INSURANCE RATE MAP NUMBER 25017C0403E DATED JUNE 4, 2010.

| REVISIONS | | |
|---|---|---|
| DATE | DESCRIPTION | BY |

COMMONWEALTH OF MASSACHUSETTS
MICHAEL J. NOVAK
CIVIL
No. 50696
REGISTERED PROFESSIONAL ENGINEER

75 OUTLOOK DRIVE
**PROPERTY RIGHTS PLAN OF LAND**
**LOCATED IN**
**LEXINGTON, MASSACHUSETTS**
**(SOUTHERN MIDDLESEX COUNTY)**
**PREPARED FOR**
ALPH ECHO – 75 OUTLOOK, LLC.


PATRIOT Engineering
35 BEDFORD STREET, SUITE 4
LEXINGTON, MASSACHUSETTS 02420
T: (978) 726-2654
www.patriot-eng.com


DESIGNED BY: M. CAPACHIETTI
CHECKED BY: M. NOVAK

**DATE:** 11/15/2021
**SCALE:** 1"=20'
**SHEET No.** SSD-3
**PROJECT No.** 21034

## NOTES:

1. THE SOLE PURPOSE OF THIS PLAN SET IS TO COMPLY WITH SECTION 135-6.9.3 OF THE TOWN OF LEXINGTON ZONING BY LAW.
2. THE TOPOGRAPHY, SITE DETAIL & SURFACE IMPROVEMENTS DEPICTED HEREON WERE OBTAINED FROM AN ONSITE SURVEY PERFORMED BY RJ O'CONNELL & ASSOCIATES, INC.
3. THE SUBJECT PROPERTY DEPICTED IS LOCATED WITHIN THE RS ZONING DISTRICT.
4. THE SUBJECT PROPERTY IS DEPICTED AS LOT 49A ON THE TOWN OF LEXINGTON ASSESSOR'S MAP 41.
5. THIS PLAN DOES NOT SHOW ANY UNRECORDED OR UNWRITTEN EASEMENTS WHICH MAY EXIST.
6. THE LOCUS PROPERTY IS LOCATED IN FLOOD ZONE X (UNSHADED), AREAS DETERMINED TO BE OUTSIDE THE 0.2% ANNUAL CHANCE FLOODPLAIN, PER FEMA FLOOD INSURANCE RATE MAP NUMBER 25017C0403E DATED JUNE 4, 2010.

## TEST PIT INFORMATION

TEST PITS WERE PERFORMED BY MICHAEL CAPACHIETTI OF RJ O'CONNELL & ASSOCIATES, ON 06/23/2021.

TEST PIT: TP-01
ELEV.=289.2±
BOTTOM OF HOLE ELEV.=283.2

| | |
|---|---|
| 0"-8" | TOPSOIL |
| 6"-24" | B: LOAMY SAND |
| 16"-72" | HORIZON C: LOAMY SAND W/ COBBLES |

NO E.S.H.G.W. OBSERVED

TEST PIT: TP-02
ELEV.=287.4±
BOTTOM OF HOLE ELEV.=277.4

| | |
|---|---|
| 0"-8" | TOPSOIL |
| 8"-26" | B: LOAMY SAND |
| 26"-120" | HORIZON C: LOAMY SAND W/ COBBLES |

NO E.S.H.G.W. OBSERVED

TEST PIT: TP-03
ELEV.=299.6±
BOTTOM OF HOLE ELEV.=293.1

| | |
|---|---|
| 0"-12" | Ap |
| 12"-24" | B: LOAMY SAND |
| 24"-78" | HORIZON C: LOAMY SAND W/ COBBLES |

NO E.S.H.G.W. OBSERVED

TEST PIT: TP-04
ELEV.=278.0±
BOTTOM OF HOLE ELEV.=272.0

| | |
|---|---|
| 0"-6" | Ap |
| 6"-24" | B: LOAMY SAND |
| 24"-72" | HORIZON C: LOAMY SAND W/ COBBLES |

NO E.S.H.G.W. OBSERVED

## SPECIAL PERMIT SUBDIVISION CALCULATIONS

| TYPE OF SPECIAL PERMIT RESIDENTIAL DEVELOPMENT | MAXIMUM GROSS FLOOR AREA (SF) | NO. OF DWELLINGS | MAXIMUM AMOUNT OF IMPERVIOUS SURFACES (SF) | MAXIMUM SITE COVERAGE (SF) | MINIMUM COMMON OPEN SPACE REQUIRED (SF) |
|---|---|---|---|---|---|
| SITE SENSITIVE | 30,608 | 4 | 26,397 | 11,633 | NOT REQUIRED |
| SITE SENSITIVE | < 30,608 | 4 | < 26,397 | < 11,633 | NOT REQUIRED |

| LEGEND | DESCRIPTION |
|---|---|
| ● | PROPOSED AREA DRAIN (PAD) |
| | PROPOSED CATCH BASIN (PCB) |
| 298 | PROPOSED CONTOUR |
| | PROPOSED DRAIN MANHOLE (PDMH) |
| PD | PROPOSED DRAIN LINE |
| | PROPOSED FIRE HYDRANT |
| | PROPOSED FILTERMITT |
| ▶ | PROPOSED FLARED END (PFE) |
| | PROPOSED LIMIT OF WORK LINE |
| | RETAINING WALL |
| | PROPOSED SEWER MANHOLE (PSMH) |
| 286x0 | PROPOSED SPOT GRADE |
| | TREES TO BE REMOVED |
| | TREES TO BE PROTECTED |
| | PROPOSED TRENCH DRAIN |

| REVISIONS | | |
|---|---|---|
| DATE | DESCRIPTION | BY |

# 75 OUTLOOK DRIVE
## SITE CONSTRUCTION PLAN
LOCATED IN
LEXINGTON, MASSACHUSETTS
(SOUTHERN MIDDLESEX COUNTY)
PREPARED FOR
ALPH ECHO – 75 OUTLOOK, LLC.

PATRIOT Engineering
35 BEDFORD STREET, SUITE 4
LEXINGTON, MASSACHUSETTS 02420
T: (978) 726-2654
www.patriot-eng.com

DESIGNED BY: M. CAPACHIETTI
CHECKED BY: M. NOVAK

DATE: 11/15/2021
SCALE: 1"=20'
SHEET No. SSD-4
PROJECT No. 21034

## NOTES:

1. THE SOLE PURPOSE OF THIS PLAN SET IS TO COMPLY WITH SECTION 135-6.9.3 OF THE TOWN OF LEXINGTON ZONING BY LAW.
2. THE TOPOGRAPHY, SITE DETAIL & SURFACE IMPROVEMENTS DEPICTED HEREON WERE OBTAINED FROM AN ONSITE SURVEY PERFORMED BY RJ O'CONNELL & ASSOCIATES, INC.
3. THE SUBJECT PROPERTY DEPICTED IS LOCATED WITHIN THE RS ZONING DISTRICT.
4. THE SUBJECT PROPERTY IS DEPICTED AS LOT 49A ON THE TOWN OF LEXINGTON ASSESSOR'S MAP 41.
5. THIS PLAN DOES NOT SHOW ANY UNRECORDED OR UNWRITTEN EASEMENTS WHICH MAY EXIST.
6. THE LOCUS PROPERTY IS LOCATED IN FLOOD ZONE X (UNSHADED), AREAS DETERMINED TO BE OUTSIDE THE 0.2% ANNUAL CHANCE FLOODPLAIN, PER FEMA FLOOD INSURANCE RATE MAP NUMBER 25017C0403E DATED JUNE 4, 2010.

## *UTILITY NOTES:*

1. *ALL SEWER MAINS SHALL BE 8" SCH 40 PVC, UNLESS OTHERWISE NOTED.*
2. *ALL PROPOSED SEWER SERVICES SHALL BE 6" SCH 40 PVC AND AT A MINIMUM 2% SLOPE, UNLESS OTHERWISE NOTED.*
3. *ALL WATER MAINS SHALL BE 6" DI, UNLESS OTHERWISE NOTED.*
4. *ALL PROPOSED WATER SERVICES SHALL BE 1.5" COPPER, UNLESS OTHERWISE NOTED.*
5. *SEPARATION OF SEWER SERVICE BELOW WATER LINE SHALL BE 18 INCHES, IF THIS CANNOT BE ARCHIVED THE SEWER SHALL BE INCASED IN CONCRETE.*

| LEGEND | DESCRIPTION |
|---|---|
| ● | PROPOSED AREA DRAIN (PAD) |
| ◉ | PROPOSED CATCH BASIN (PCB) |
| Ⓓ | PROPOSED DRAIN MANHOLE (PDMH) |
| ——PD—— | PROPOSED DRAIN LINE |
| | PROPOSED FIRE HYDRANT |
| | PROPOSED FILTERMITT |
| ▶ | PROPOSED FLARED END (PFE) |
| ——PG—— | PROPOSED GAS LINE |
| | PROPOSED LIMIT OF WORK LINE |
| | PLUG |
| | PROPOSED RETAINING WALL |
| ——PS—— | PROPOSED SEWER LINE |
| Ⓢ | PROPOSED SEWER MANHOLE (PSMH) |
| ——PTEC—— | TELEPHONE CONDUIT |
| | PROPOSED TRENCH DRAIN |
| ——PW—— | PROPOSED WATER LINE |

| REVISIONS | | |
|---|---|---|
| DATE | DESCRIPTION | BY |

# 75 OUTLOOK DRIVE
## SITE UTILITY PLAN
LOCATED IN
LEXINGTON, MASSACHUSETTS
(SOUTHERN MIDDLESEX COUNTY)
PREPARED FOR
ALPH ECHO – 75 OUTLOOK, LLC.

PATRIOT Engineering
35 BEDFORD STREET, SUITE 4
LEXINGTON, MASSACHUSETTS 02420
T: (978) 726-2654
www.patriot-eng.com

DESIGNED BY: M. CAPACHIETTI
CHECKED BY: M. NOVAK

**DATE:** 11/15/2021
**SCALE:** 1"=20'
**SHEET No.** SSD-5
**PROJECT No.** 21034

## PLANT LIST

| | BOTANICAL NAME | COMMON NAME | QTY | SIZE | NOTES |
|---|---|---|---|---|---|
| DECIDUOUS TREES | | | | | |
| AR | ACER X FREEMANII 'AUT.BLAZE' | FREEMAN RED MAPLE | 5 | 3"–3.5" CAL. | B&B |
| AS | ACER SACCHARUM | SUGAR MAPLE | 3 | 3"–3.5" CAL. | B&B |
| ORNAMENTAL TREES | | | | | |
| AC | AMELANCHIER CANADENSIS | SHADBLOW SERVICEBERRY | 9 | 8'–10' | B&B |
| CF | CORNUS FLORIDA | FLORIDA DOGWOOD | 8 | 8'–10' | B&B |
| PS | PRUNUS SUB. 'AUTUMNALIS' | AUTUMN FLWG CHERRY | 3 | 8'–10' | B&B |
| EVERGREEN TREES | | | | | |
| PS | PINUS STROBUS | WHITE PINE | 21 | 8'–10' | B&B |
| TP | THUJA PLICATA | WESTERN RED CEDAR | 9 | 8'–10' | B&B |
| SHRUBS | | | | | |
| HT | HYDRANGEA PANIC. 'TARDIVA' | HYDRANGEA | 3 | #5 | C.G. |
| IG | ILEX GLABRA 'SHAMROCK' | INKBERRY | 24 | #5 | C.G. |
| IM | ILEX X MESERVEAE | MESERVE HOLLY | 13 | 3'–3.5' | B&B |
| SV | SYRINGA VULGARIS | COMMON LILLAC | 9 | 7–8' | B&B |
| VP | VIBURNUM PLICATUM 'TOM.' | DOUBLEFILE VIBURNUM | 7 | 3'–3.5' | B&B |
| SP | SYRINGA PATULA | MISS KIM LILAC | 14 | 2.5' – 3' | B&B |
| JS | JUNIPERUS SARGENTII | SARGENT JUNIPER | 31 | #3 | C.G. |

## LANDSCAPE NOTES:

1. SEE SHEET SSD-4 FOR GENERAL NOTES AND LEGEND
2. THE LOCATIONS OF EXISTING UNDERGROUND UTILITIES ARE SHOWN IN AN APPROXIMATE WAY ONLY AND HAVE NOT BEEN INDEPENDENTLY VERIFIED BY THE OWNER OR ITS REPRESENTATIVE. THE CONTRACTOR SHALL DETERMINE THE EXACT LOCATION OF ALL EXISTING UTILITIES BEFORE COMMENCING WORK, AND AGREES TO BE FULLY RESPONSIBLE FOR ANY AND ALL DAMAGES WHICH MAY BE OCCASIONED BY THE CONTRACTOR'S FAILURE TO EXACTLY LOCATE AND PRESERVE ALL UNDERGROUND UTILITIES.
3. CONTRACTOR SHALL BEGIN MAINTENANCE IMMEDIATELY AFTER PLANTING AND WILL CONTINUE UNTIL FINAL WRITTEN ACCEPTANCE OF PLANT MATERIAL.
4. ALL MATERIALS SHALL CONFORM TO THE GUIDELINES ESTABLISHED BY THE AMERICAN NURSERY AND LANDSCAPE ASSOCIATION.
5. ALL PLANTS SHALL BEAR THE SAME RELATIONSHIP TO FINISH GRADE AS TO ORIGINAL GRADES BEFORE DIGGING.
6. ALL PLANTS TO BE BALLED IN BURLAP OR CONTAINERIZED.
7. ALL PLANTED AREAS TO BE EDGED AND MULCHED WITH AGED PINE BARK: PARTIALLY DECOMPOSED, JET BLACK IN COLOR AND FREE OF WOOD CHIPS THICKER THAN 1/4 INCH.
8. PLANTING SOIL MIX: UTILIZE EXISTING SITE LOAM FROM STOCKPILES. THOROUGHLY INCORPORATE WITH COMPOST AS NEEDED PER SOILS ANALYSIS. FERTILIZE PER RECOMMENDED RATES IN SOIL ANALYSIS.
9. THE LANDSCAPE CONTRACTOR SHALL GUARANTEE ALL PLANT MATERIALS FOR ONE (1) FULL YEAR FROM DATE OF ACCEPTANCE.
10. ALL PLANT MATERIALS ARE SUBJECT TO THE APPROVAL OF THE LANDSCAPE ARCHITECT, AT THE NURSERY, AND AT THE SITE.
11. ALL AREAS OF THE SITE WHICH HAVE BEEN DISTURBED AND NOT OTHERWISE DEVELOPED SHALL BE LOAMED AND SEEDED WITH A MINIMUM DEPTH OF 6" DEPTH TOPSOIL UNLESS OTHERWISE NOTED.

## LEGEND

- PROP. SHADE TREE
- PROP. EVERGREEN TREE
- PROP. ORNAMENTAL TREE
- PROPOSED SHRUB PLANTING
- EX. SHRUB PLANTING
- EX.TREE T.B.R
- EX.TREE T.B. PROTECTED

20 0 10 20 40
GRAPHIC SCALE IN FEET

| REVISIONS | | | |
|---|---|---|---|
| DATE | DESCRIPTION | BY | |

J THOMA LAND DESIGN STUDIOS LDS Live Work Play

MASSACHUSETTS JEFFREY A. THOMA No. 1377 REGISTERED LANDSCAPE ARCHITECT

75 OUTLOOK DRIVE
LANDSCAPE PLANTING PLAN
LOCATED IN
LEXINGTON, MASSACHUSETTS
(SOUTHERN MIDDLESEX COUNTY)
PREPARED FOR
ALPH ECHO – 75 OUTLOOK, LLC.


J Thoma Land Design Studios
141 Haggetts Pond Rd
Andover, MA 01810
978.409.9815 - www.jthomalds.com


DESIGNED BY: JAT
CHECKED BY: JAT

DATE: 11.15.21
SCALE: 1"=20'
SHEET No. SSD-6
PROJECT No. 21034

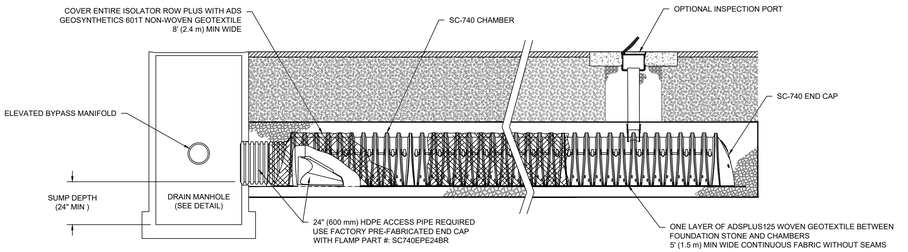


## SC-740 ISOLATOR ROW PLUS DETAIL

(NOT TO SCALE)

## INSPECTION & MAINTENANCE

STEP 1) INSPECT ISOLATOR ROW PLUS FOR SEDIMENT
- A. INSPECTION PORTS (IF PRESENT)
  - A.1. REMOVE/OPEN LID ON NYLOPLAST INLINE DRAIN
  - A.2. REMOVE AND CLEAN FLEXSTORM FILTER IF INSTALLED
  - A.3. USING A FLASHLIGHT AND STADIA ROD, MEASURE DEPTH OF SEDIMENT AND RECORD ON MAINTENANCE LOG
  - A.4. LOWER A CAMERA INTO ISOLATOR ROW PLUS FOR VISUAL INSPECTION OF SEDIMENT LEVELS (OPTIONAL)
  - A.5. IF SEDIMENT IS AT, OR ABOVE, 3" (80 mm) PROCEED TO STEP 2. IF NOT, PROCEED TO STEP 3.
- B. ALL ISOLATOR PLUS ROWS
  - B.1. REMOVE COVER FROM STRUCTURE AT UPSTREAM END OF ISOLATOR ROW PLUS
  - B.2. USING A FLASHLIGHT, INSPECT DOWN THE ISOLATOR ROW PLUS THROUGH OUTLET PIPE
    - i) MIRRORS ON POLES OR CAMERAS MAY BE USED TO AVOID A CONFINED SPACE ENTRY
    - ii) FOLLOW OSHA REGULATIONS FOR CONFINED SPACE ENTRY IF ENTERING MANHOLE
  - B.3. IF SEDIMENT IS AT, OR ABOVE, 3" (80 mm) PROCEED TO STEP 2. IF NOT, PROCEED TO STEP 3.

STEP 2) CLEAN OUT ISOLATOR ROW PLUS USING THE JETVAC PROCESS
- A. A FIXED CULVERT CLEANING NOZZLE WITH REAR FACING SPREAD OF 45" (1.1 m) OR MORE IS PREFERRED
- B. APPLY MULTIPLE PASSES OF JETVAC UNTIL BACKFLUSH WATER IS CLEAN
- C. VACUUM STRUCTURE SUMP AS REQUIRED

STEP 3) REPLACE ALL COVERS, GRATES, FILTERS, AND LIDS; RECORD OBSERVATIONS AND ACTIONS.

STEP 4) INSPECT AND CLEAN BASINS AND MANHOLES UPSTREAM OF THE STORMTECH SYSTEM.

## NOTES

1. INSPECT EVERY 6 MONTHS DURING THE FIRST YEAR OF OPERATION. ADJUST THE INSPECTION INTERVAL BASED ON PREVIOUS OBSERVATIONS OF SEDIMENT ACCUMULATION AND HIGH WATER ELEVATIONS.
2. CONDUCT JETTING AND VACTORING ANNUALLY OR WHEN INSPECTION SHOWS THAT MAINTENANCE IS NECESSARY.

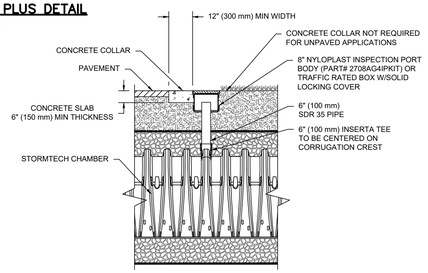


NOTE:
INSPECTION PORTS MAY BE CONNECTED THROUGH ANY CHAMBER CORRUGATION CREST.

## 6" PVC INSPECTION PORT DETAIL (SC SERIES CHAMBER)

(NOT TO SCALE)

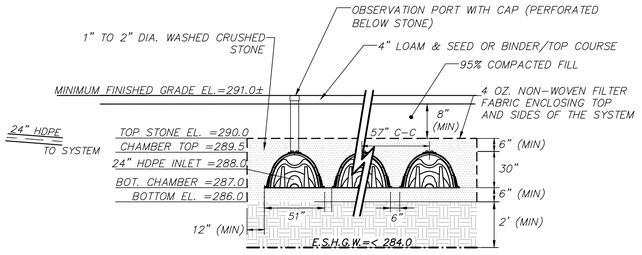


SECTION DETAIL

NOTES:
6" MIN. SEPARATION PROVIDED BETWEEN ROWS OF CHAMBERS

## PROPOSED SUBSURFACE INFILTRATION SYSTEM-1 (PSIS-1) (CROSS SECTION)

(NOT TO SCALE)

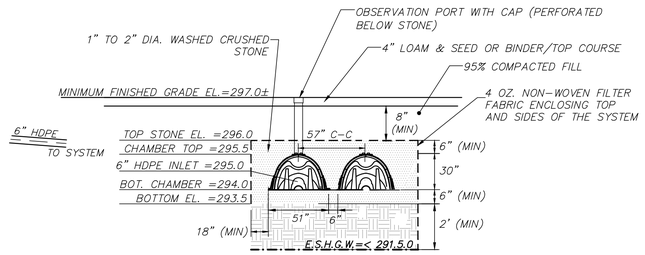


SECTION DETAIL

NOTES:
6" MIN. SEPARATION PROVIDED BETWEEN ROWS OF CHAMBERS

## PROPOSED SUBSURFACE INFILTRATION SYSTEM-2 (PSIS-2) (CROSS SECTION)

(NOT TO SCALE)

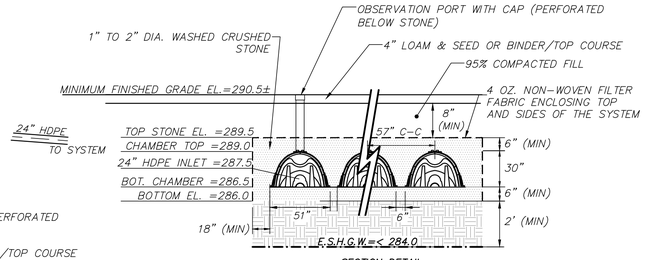


SECTION DETAIL

NOTES:
6" MIN. SEPARATION PROVIDED BETWEEN ROWS OF CHAMBERS

## PROPOSED SUBSURFACE INFILTRATION SYSTEM-4 (PSIS-4) (CROSS SECTION)

(NOT TO SCALE)

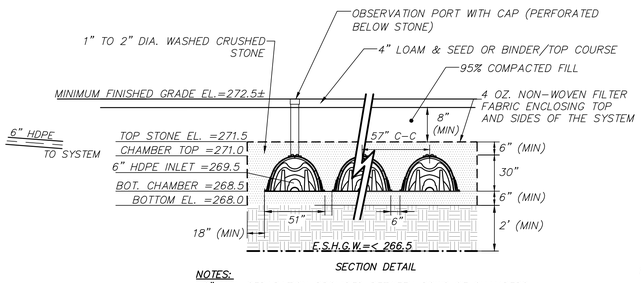


SECTION DETAIL

NOTES:
6" MIN. SEPARATION PROVIDED BETWEEN ROWS OF CHAMBERS

## PROPOSED SUBSURFACE INFILTRATION SYSTEM-3 (PSIS-3) (CROSS SECTION)

(NOT TO SCALE)

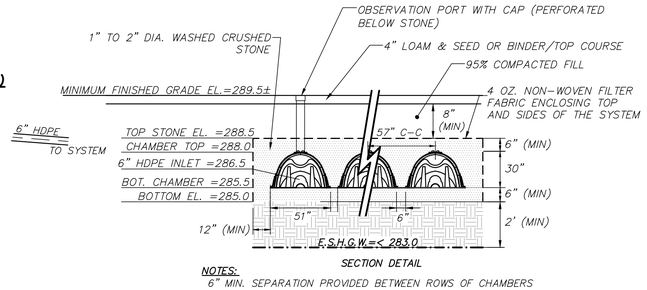


SECTION DETAIL

NOTES:
6" MIN. SEPARATION PROVIDED BETWEEN ROWS OF CHAMBERS

## PROPOSED SUBSURFACE INFILTRATION SYSTEM-5 (PSIS-5) (CROSS SECTION)

(NOT TO SCALE)

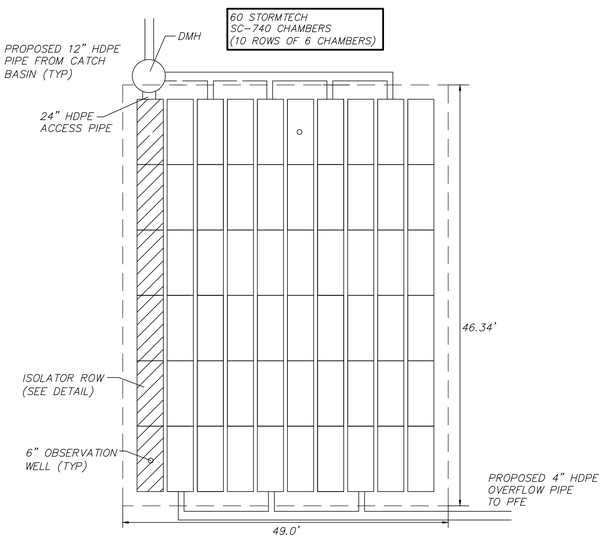


## PROPOSED SUBSURFACE INFILTRATION SYSTEM-1 (PSIS-1) (PLAN VIEW)

(NOT TO SCALE)

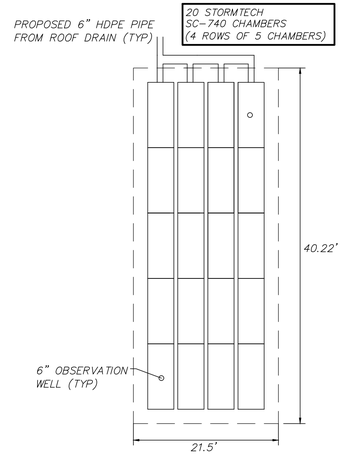


## PROPOSED SUBSURFACE INFILTRATION SYSTEM-3 (PSIS-3) (PLAN VIEW)

(NOT TO SCALE)

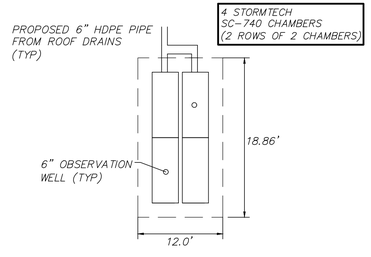


## PROPOSED SUBSURFACE INFILTRATION SYSTEM-2 (PSIS-2) (PLAN VIEW)

(NOT TO SCALE)

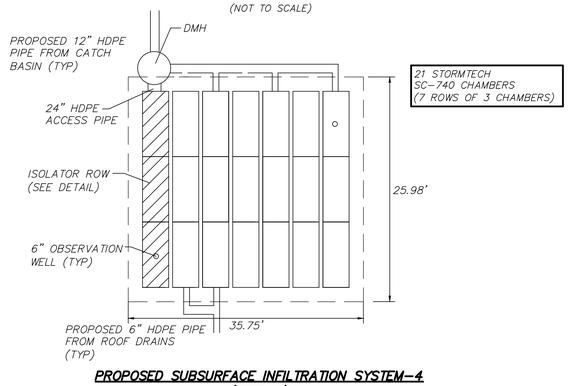


## PROPOSED SUBSURFACE INFILTRATION SYSTEM-4 (PSIS-4) (PLAN VIEW)

(NOT TO SCALE)

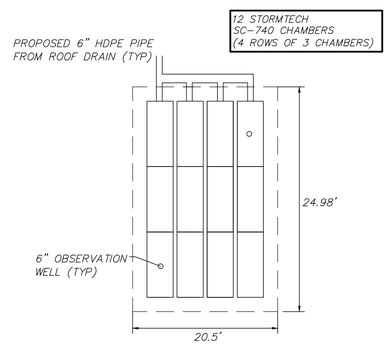


## PROPOSED SUBSURFACE INFILTRATION SYSTEM-5 (PSIS-5) (PLAN VIEW)

(NOT TO SCALE)

**NOTES:**
1. FOR DETAILS NOT DEPICTED HEREON, REFER TO STANDARD DETAILS AS PROVIDED BY THE TOWN OF LEXINGTON ENGINEERING DEPARTMENT.
2. MHD REFERS TO THE COMMONWEALTH OF MASSACHUSETTS DEPARTMENT OF PUBLIC WORKS, STANDARD SPECIFICATIONS OF HIGHWAYS AND BRIDGES, INCLUDING THE LATEST AMENDMENTS AND ADDENDUM THERETO.

LEXINGTON PLANNING BOARD

DATE:

REVISIONS

| DATE | DESCRIPTION | BY |
|---|---|---|

COMMONWEALTH OF MASSACHUSETTS
MICHAEL J. NOVAK
CIVIL
No. 50696
REGISTERED PROFESSIONAL ENGINEER

75 OUTLOOK DRIVE
SITE DETAILS
LOCATED IN
LEXINGTON, MASSACHUSETTS
(MIDDLESEX COUNTY)
PREPARED FOR
ALPHA ECHO 75 OUTLOOK, LLC

PATRIOT Engineering
35 BEDFORD STREET, SUITE 4
LEXINGTON, MASSACHUSETTS 02420
T: (978) 726-2654
www.patriot-eng.com

DESIGNED BY: M. CAPACHIETTI
CHECKED BY: M. NOVAK

DATE: NOVEMBER 15, 2021
SCALE: 1"=20'
SHEET No. SSD-7
PROJECT No. 20-08

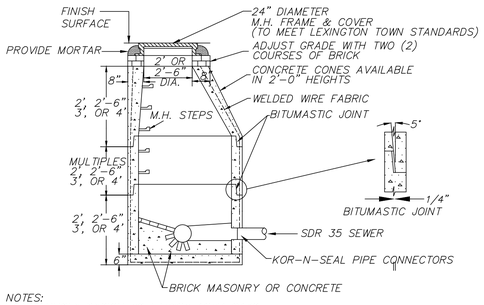


NOTES:
1. MANHOLE DESIGN TO LATEST ASTM C478.
2. REINFORCING STEEL CONFORMS TO LATEST ASTM A 185.
3. CONCRETE COMPRESSIVE STRENGTH-4,000 PSI @ 28 DAYS.
4. ONE POUR MONOLITHIC BASE.
5. WHEN SPECIFIED, MANHOLES WATERPROOF COATED.
6. STEPS-STEEL REINFORCED COPOLYMER POLYPROPELENE PLASTIC (PS2-PFSL M.A. INDUSTRIES, INC.) CONFORMS TO LATEST ASTM C478 PARA-12.
7. BITUMASTIC BUTYL RUBBER FOR JOINTS CONFORM TO LATEST ASTM C443 AND FED SS-S-201A SPEC.
8. KOR-N-SEAL FLEXIBLE PIPE CONNECTORS FROM 3.5" TO 21.25" O.D. ASTM C923, A167.

**SEWER MANHOLE DETAIL**
(NOT TO SCALE)

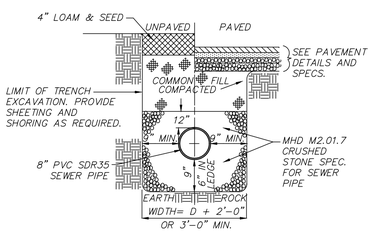


**GRAVITY SEWER TRENCH DETAIL**
(NOT TO SCALE)

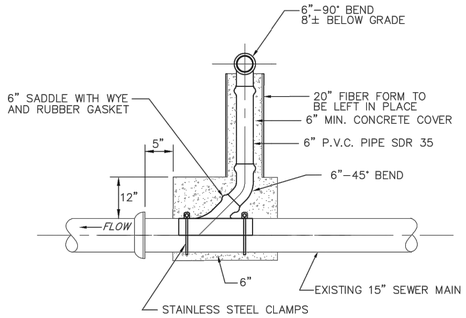


**TYPICAL SEWER CHIMNEY DETAIL**
(NOT TO SCALE)

LEXINGTON PLANNING BOARD

DATE:

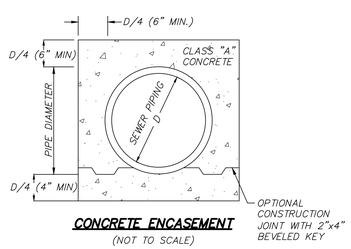


**CONCRETE ENCASEMENT**
(NOT TO SCALE)

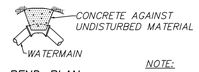


**BEND-PLAN**

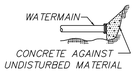


**PLUG ELEVATION**

**TEE-PLAN**

NOTE:
1) CONCRETE FOR THRUST BLOCKS SHALL HAVE A MINIMUM COMPREHENSIVE STRENGTH OF 2000 PSI AT 28 DAYS
2) THRUST BLOCK BEARING AREAS TO BE IN ACCORDANCE WITH TABLE BELOW, UNLESS DETERMINED OTHERWISE BY THE ENGINEER BECAUSE OF SOIL CONDITIONS

| TABLE OF BEARING AREAS (S.F.) | | | |
|---|---|---|---|
| SIZE OF MAIN (IN.) | 90° * BEND | TEES & * PLUGS | 45° BEND |
| 6 | 4 | 4 | 4 |
| 8 | 6 | 4 | 3 |

* RESTRAINED JOINTS ARE ALSO REQUIRED

**THRUST BLOCK DETAIL**
(NOT TO SCALE)

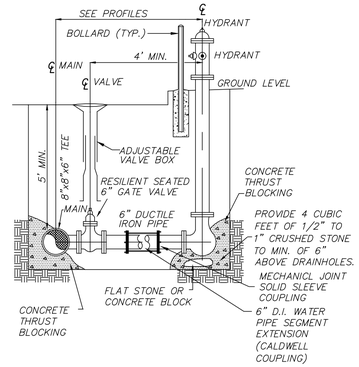


**HYDRANT AND GATE VALVE DETAIL W/ MECHANICAL JOINT COUPLING**
(NOT TO SCALE)

NOTES:
1. HYDRANT SHALL BE AMERICAN-DARLING 5 ½ INCH B-84-B-5. HYDRANT COLOR: BARREL - OSHA BLACK, BONNET - OSHA WHITE, NOZZLE CAPS - OSHA BLACK.
2. ALL HYDRANTS, VALVES AND VALVE BOXES SHALL BE AMERICAN MADE ONLY. VALVES SHALL OPEN RIGHT (CLOCKWISE), HYDRANTS SHALL OPEN RIGHT (CLOCKWISE).

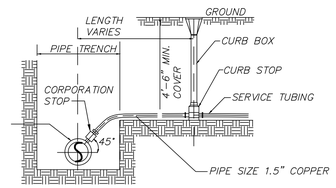


**TYPICAL WATER SERVICE:**
(NOT TO SCALE)

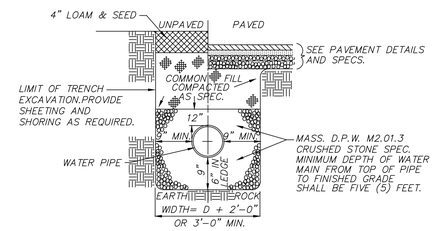


**WATER TRENCH**
(NOT TO SCALE)

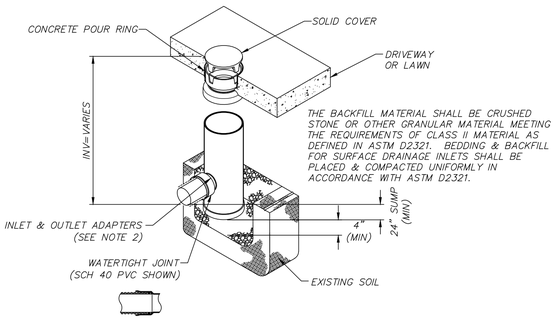


NOTES:
1. COVER SHALL COMPLY TO H-20 LOADING CAPACITY.
2. STANDARD DRAIN BASIN HAS FIXED ADAPTER LOCATIONS OF 0° & 180°. CUSTOM DRAIN BASIN ADAPTERS CAN BE MOUNTED ON ANY ANGLE 0° TO 360°. DRAINAGE CONNECTION STUB JOINT TIGHTNESS SHALL CONFORM SCH 40 PVC.
3. DRAINAGE CONNECTION STUB JOINT TIGHTNESS SHALL CONFORM TO ASTM D3212 FOR CORRUGATED HDPE (ADS N-12/HANCOR DUAL WALL)

**PROPOSED SEDIMENT BASIN 8" NYLOPLAST DRAIN BASIN® (OR APPROVED EQUAL)**
(NOT TO SCALE)

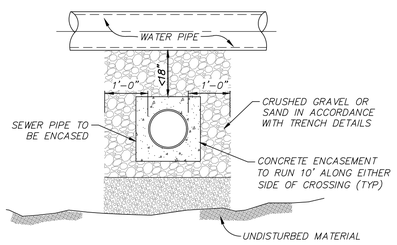


HEIGHT SEPARATION LESS THAN 18"

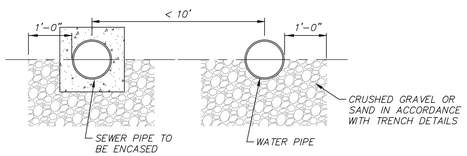


DISTANCE SEPARATION LESS THAN 10'

CONTRACTOR TO VERIFY SERVICE CROSSINGS CONFORM TO THE DETAILS ABOVE

**SEWER ENCASEMENT REQUIREMENTS**
(NOT TO SCALE)

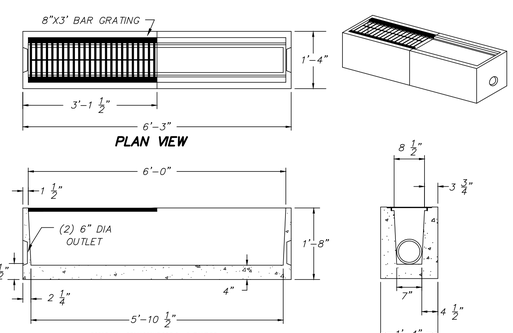


NOTES:
1. CONCRETE: 4,000 PSI MINIMUM AFTER 28 DAYS.
2. AVAILABLE IN END OR MIDDLE SECTIONS; MULTIPLE SECTIONS WILL BE REQUIRED TO SPAN THE WIDTH OF THE PROPOSED PARKING AREA
3. CONFORMS TO H-20 LOADING.
4. USE SHEA CONCRETE ITEM NO. M-TD6 6' SECTION OR APPROVED EQUAL.

**PROPOSED TRENCH DRAIN DETAIL**
(NOT TO SCALE)

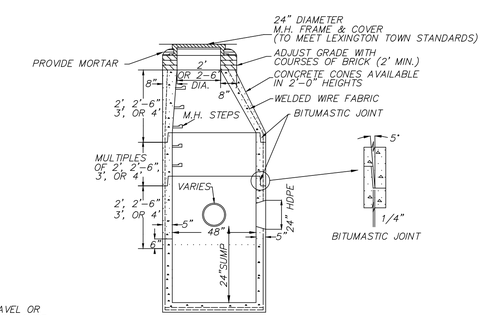


NOTES:
1. MANHOLE DESIGN TO LATEST ASTM C478.
2. REINFORCING STEEL CONFORMS TO LATEST ASTM A 185.
3. CONCRETE COMPRESSIVE STRENGTH - 4,000 PSI @ 28 DAYS.
4. ONE POUR MONOLITHIC BASE.
5. WHEN SPECIFIED, MANHOLES WATERPROOF COATED.
6. STEPS - STEEL REINFORCED COPOLYMER POLYPROPYLENE PLASTICS (PS2-PFSL M.A. INDUSTRIES, INC.) CONFORMS TO LATEST ASTM C478 PARA-12.
7. BITUMASTIC BUTYL RUBBER FOR JOINTS CONFORM TO LATEST ASTM C443 AND FED SS-S-201A SPEC.

**TYPICAL DRAIN MANHOLE DETAIL**
(NOT TO SCALE)

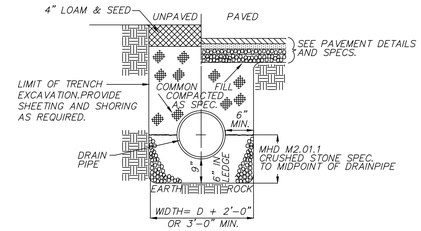


**PROPOSED DRAIN PIPE TRENCH DETAIL**
(NOT TO SCALE)

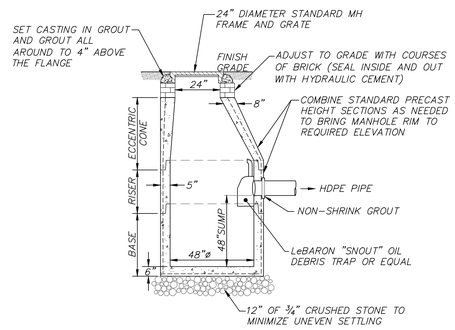


NOTES:
1. 48" DIAMETER CATCHBASIN MANHOLE AS MANUFACTURED BY SHEA CONCRETE PRODUCTS OR EQUAL.
2. CONCRETE: 4,000 PSI MINIMUM AFTER 28 DAYS.
3. REINFORCED STEEL CONFORMS TO LATEST ASTM A185 SPEC. 0.12 SQ IN/LINEAL FT AND 0.12 SQ IN (BOTH WAYS) BASE BOTTOM.
4. H-20 DESIGN LOADING PER AASHTO HS-20-44; ASTM C478 SPEC FOR PRECAST REINFORCED CONCRETE MANHOLE SECTIONS.
5. BUTYL RESIN SECTION JOINT CONFORMS TO LATEST ASTM C443 SPEC.
6. PROVIDE EXTERIOR DAMPPROOFING AS REQUIRED.

**DEEP SUMP CATCHBASIN WITH OIL DEBRIS TRAP (PCB)**
(NOT TO SCALE)

**NOTES:**
1. **FOR DETAILS NOT DEPICTED HEREON, REFER TO STANDARD DETAILS AS PROVIDED BY THE TOWN OF LEXINGTON ENGINEERING DEPARTMENT.**
2. **MHD REFERS TO THE COMMONWEALTH OF MASSACHUSETTS DEPARTMENT OF PUBLIC WORKS, STANDARD SPECIFICATIONS OF HIGHWAYS AND BRIDGES, INCLUDING THE LATEST AMENDMENTS AND ADDENDUM THERETO.**

REVISIONS

| DATE | DESCRIPTION | BY |
|---|---|---|
| | | |

COMMONWEALTH OF MASSACHUSETTS
MICHAEL J. NOVAK
CIVIL
No. 50696
REGISTERED PROFESSIONAL ENGINEER

75 OUTLOOK DRIVE
SITE DETAILS
LOCATED IN
LEXINGTON, MASSACHUSETTS
(MIDDLESEX COUNTY)
PREPARED FOR
ALPHA ECHO 75 OUTLOOK, LLC


PATRIOT Engineering
35 BEDFORD STREET, SUITE 4
LEXINGTON, MASSACHUSETTS 02420
T: (978) 726-2654
www.patriot-eng.com


DESIGNED BY: M. CAPACHIETTI
CHECKED BY: M. NOVAK

DATE: NOVEMBER 15, 2021
SCALE: 1"=20'
SHEET No. SSD-8
PROJECT No. 20-08

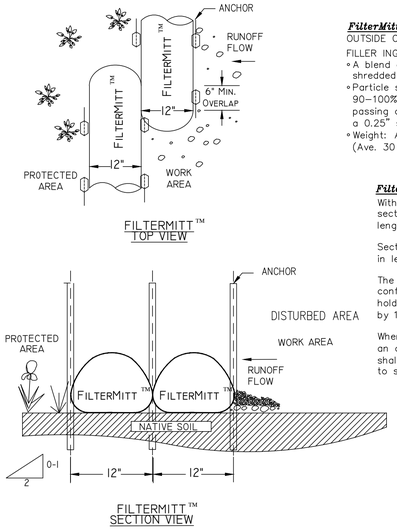


**FilterMitt™ COMPONENTS:**

OUTSIDE CASING: 100% organic hessian.

FILLER INGREDIENT: *FiberRoot Mulch™*

- A blend of coarse and fine compost and shredded wood.
- Particle sizes: 100% passing a 3" screen; 90–100% passing a 1" screen; 70–100% passing a 0.75" screen; 30–75% passing a 0.25" screen.
- Weight: Approx. 850 lbs./cu.yd. (Ave. 30 lbs./l.f.)

**FilterMitt™ INSTALLATION:**

With the newest technology and equipment, sections can be constructed on site in lengths from 1' to 100'.

Sections can also be delivered to the site in lengths from 1' to 8'.

The flexibility of FilterMitt allows it to conform to any contour or terrain while holding a slightly oval shape at 12" high by 18" wide.

Where section ends meet, there shall be an overlap of 6" or greater. Both sides shall be anchored (oak stakes, trees, etc.) to stabilize the union.

**FILTERMITT™ DETAIL**

(NOT TO SCALE)

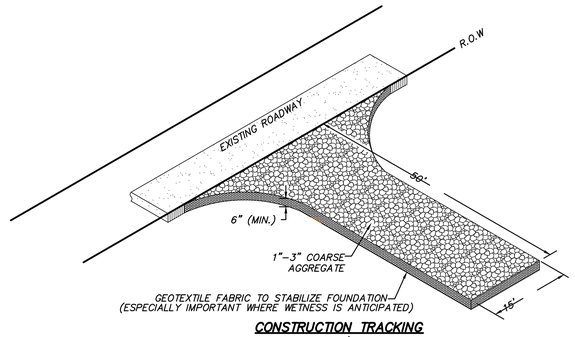


**CONSTRUCTION TRACKING ENTRANCE/EXIT PAD**

(NOT TO SCALE)

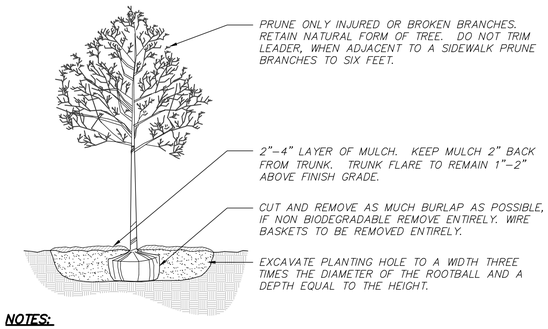


**NOTES:**

1. TREES TO BE A MINIMUM OF 3.5" CALIPER AND 8–10' HT.
2. BACKFILL PLANTING HOLE WITH EXISTING SOIL AMENDED AS NECESSARY.
3. BACKFILL HALF THE SOIL AND WATER TO SETTLE OUT AIR POCKETS, COMPLETE BACKFILLING AND REPEAT WATERING.
4. IF ROOTS ARE CIRCLING THE ROOTBALL EXTERIOR, CUT ROOTS VERTICALLY IN SEVERAL PLACES PRIOR TO PLANTING.
5. ONLY STAKE TREES SITUATED ON WINDY SITES OR EXPOSED TO SUBSTANTIAL PEDESTRIAN TRAFFIC.

**TREE PLANTING**

(NOT TO SCALE)

**NOTE:**

1. EXISTING TREES TO BE SAVED SHALL BE PROTECTED WITH ORANGE CONSTRUCTION FENCE (OFF-SET FROM THE TREE TRUNK BY PROFESSIONAL STANDARD BASED ON CANOPY) AND BURLAP AND STRAP BOARD TRUNK WRAP METHOD.

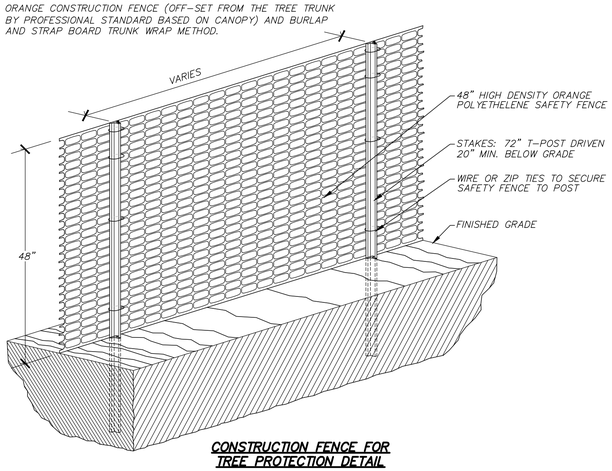


**CONSTRUCTION FENCE FOR TREE PROTECTION DETAIL**

(NOT TO SCALE)

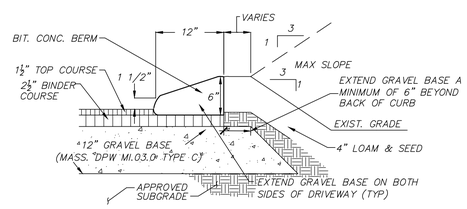


**PROPOSED CAPE COD BERM**

(NOT TO SCALE)

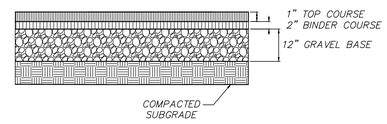


**BITUMINOUS CONCRETE PAVEMENT SECTION**

(NOT TO SCALE)

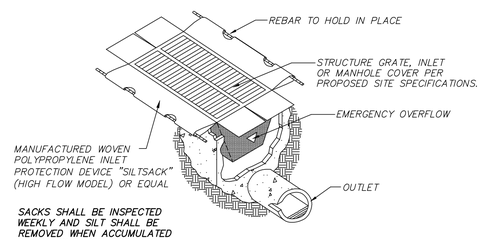


SACKS SHALL BE INSPECTED WEEKLY AND SILT SHALL BE REMOVED WHEN ACCUMULATED TO ALLOW CATCH BASIN TO FUNCTION PROPERLY

**SILTSACK DETAIL**

(NOT TO SCALE)

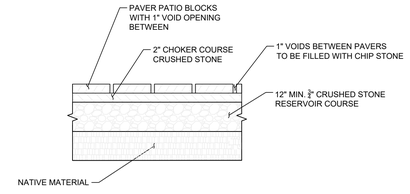


**PROPOSED POROUS PAVER PATIO DETAIL**

(NOT TO SCALE)

**NOTES:**

1. FOR DETAILS NOT DEPICTED HEREON, REFER TO STANDARD DETAILS AS PROVIDED BY THE TOWN OF LEXINGTON ENGINEERING DEPARTMENT.
2. MHD REFERS TO THE COMMONWEALTH OF MASSACHUSETTS DEPARTMENT OF PUBLIC WORKS, STANDARD SPECIFICATIONS OF HIGHWAYS AND BRIDGES, INCLUDING THE LATEST AMENDMENTS AND ADDENDUM THERETO.

LEXINGTON PLANNING BOARD

DATE:

| REVISIONS | | |
|---|---|---|
| DATE | DESCRIPTION | BY |

COMMONWEALTH OF MASSACHUSETTS
MICHAEL J. NOVAK
CIVIL
No. 50696
REGISTERED PROFESSIONAL ENGINEER

75 OUTLOOK DRIVE
SITE DETAILS
LOCATED IN
**LEXINGTON, MASSACHUSETTS**
(MIDDLESEX COUNTY)
PREPARED FOR
ALPHA ECHO 75 OUTLOOK, LLC

PATRIOT Engineering
35 BEDFORD STREET, SUITE 4
LEXINGTON, MASSACHUSETTS 02420
T: (978) 726-2654
www.patriot-eng.com

DESIGNED BY: M. CAPACHIETTI
CHECKED BY: M. NOVAK

DATE: NOVEMBER 15, 2021
SCALE: 1"=20'
SHEET No. SSD-9
PROJECT No. 20-08

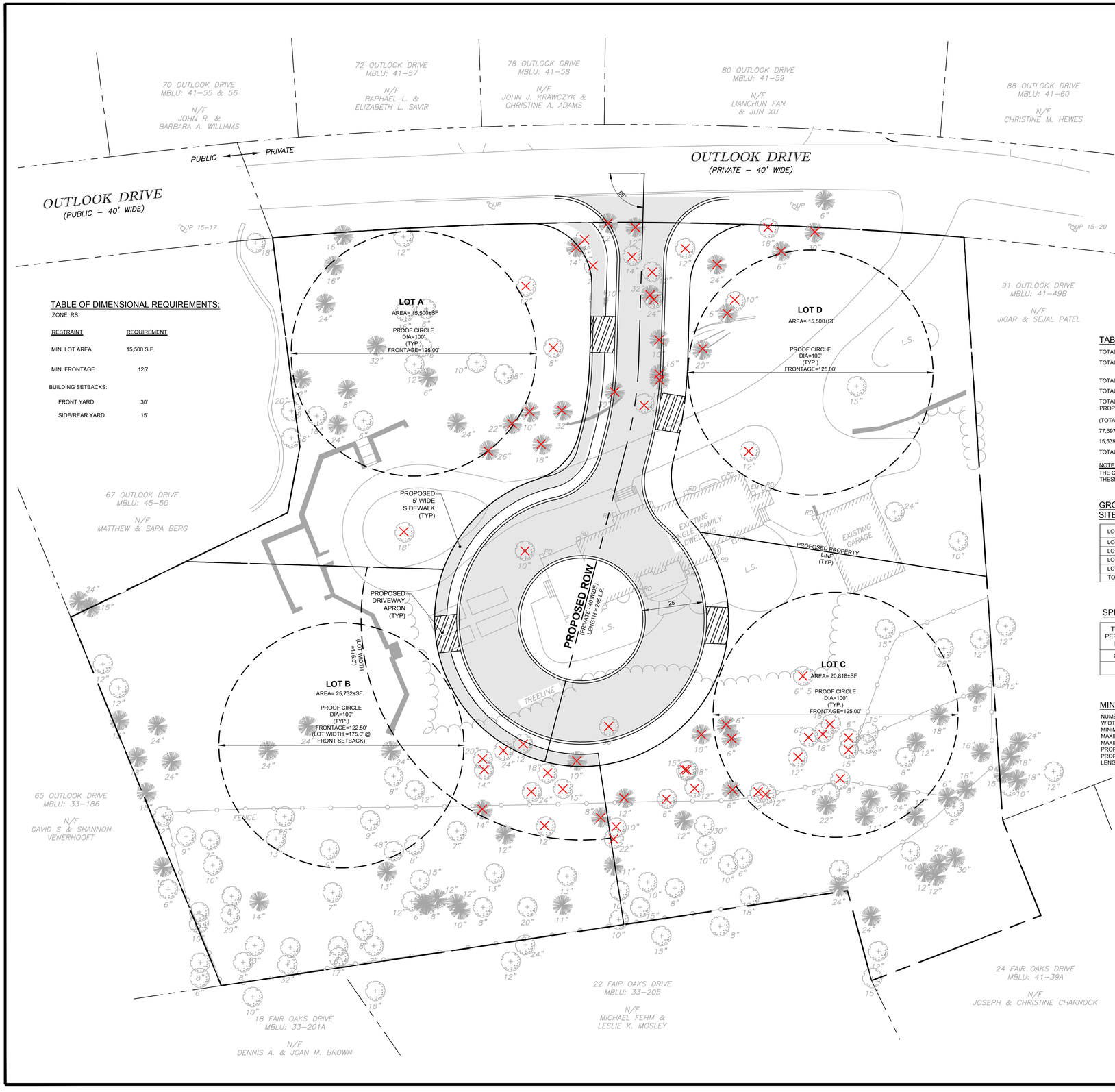


## LEGEND:

| | |
|---|---|
| | APPROXIMATE EXISTING PROPERTY LINES |
| | PROOF CIRCLE |
| | PROPOSED CENTERLINE |
| R= | RADIUS |
| TYP | TYPICAL |
| PEOP | PROPOSED EDGE OF PAVEMENT |
| SF | SQUARE FEET |
| ROW | RIGHT OF WAY |
| DIA | DIAMETER |
| | PROPOSED PAVEMENT |
| | PROPOSED DRIVEWAY APRON |
| | DECIDUOUS TREE |
| | CONIFEROUS TREE |
| | DECIDUOUS TREE PROPOSED TO BE REMOVED |
| | CONIFEROUS TREE PROPOSED TO BE REMOVED |

## TABLE OF DIMENSIONAL REQUIREMENTS:

ZONE: RS

| RESTRAINT | REQUIREMENT |
|---|---|
| MIN. LOT AREA | 15,500 S.F. |
| MIN. FRONTAGE | 125' |
| BUILDING SETBACKS: | |
| FRONT YARD | 30' |
| SIDE/REAR YARD | 15' |

## TABLE OF DEVELOPMENTAL DATA

| | |
|---|---|
| TOTAL ASSESSED LAND AREA OF DEVELOPMENT | 93,597. (MAP 41, LOTS 49A) |
| TOTAL CALCULATED LAND AREA OF DEVELOPMENT | 93,597± SF (MAP 41, LOT 49A) (SEE NOTE BELOW) |
| TOTAL ONSITE DEVELOPABLE SITE AREA | 93,597± SF |
| TOTAL AREA WITHIN PROPOSED ROW | 15,900± SF |
| TOTAL AREA OF IMPERVIOUS SURFACES WITHIN PROPOSED ROW | 10,858± SF |

(TOTAL AREA OF LOTS IN PROOF PLAN = TOTAL CALCULATED LAND AREA OF DEVELOPMENT - TOTAL AREA WITHIN PROPOSED ROW = (93,597 - 15,900) = 77,697 SF

77,697 SF x 0.20 = 15,539 SF

15,539 SF + (TOTAL IMPERVIOUS AREA WITHIN ROW OF PROOF PLAN) = (15,539 + 10,858) = 26,397 SF

TOTAL IMPERVIOUS SURFACE AREA ALLOWABLE IN A SITE SENSITIVE DEVELOPMENT = 26,397 SF.

NOTE:
THE CALCULATED AREAS DEPICTED ON THIS PLAN FOR THE EXISTING LOT ARE BASED OFF THE TOWN OF LEXINGTON ONLINE GIS MAPPING SYSTEM. THESE AREAS ARE SUBJECT TO MODIFICATION PRIOR TO A DEFINITIVE SUBDIVISION APPLICATION.

## GROSS FLOOR AREA (GFA) CHART
## SITE SENSITIVE DEVELOPMENT (SSD)

| LOT # | MAX. GFA ALLOWED | PROPOSED GFA |
|---|---|---|
| LOT A | 7,030 SF | - |
| LOT B | 8,667 SF | - |
| LOT C | 7,881 SF | - |
| LOT D | 7,030 SF | - |
| TOTAL | 30,608 SF | < 30,608 SF |

## SPECIAL PERMIT SUBDIVISION CALCULATIONS

| TYPE OF SPECIAL PERMIT RESIDENTIAL DEVELOPMENT | MAXIMUM GROSS FLOOR AREA (SF) | NO. OF DWELLINGS | MAXIMUM AMOUNT OF IMPERVIOUS SURFACES (SF) | MAXIMUM SITE COVERAGE (SF) | MINIMUM COMMON OPEN SPACE REQUIRED (SF) |
|---|---|---|---|---|---|
| SITE SENSITIVE | 30,608 | 4 | 26,397 | 11,633 | NOT REQUIRED |
| PROPOSED | < 30,608 | 4 | <26,397 | < 11,633 | NOT REQUIRED |

## MINOR RESIDENTIAL STREET:

NUMBER OF DWELLING UNITS SERVED: 4 PROPOSED
WIDTH OF PROPOSED RIGHT-OF-WAY: 40' (40' MIN. REQUIRED)
MINIMUM PAVEMENT WIDTH: 20' (20' PROPOSED)
MAXIMUM GRADE: 8.0% (7.0% PROPOSED)
MAXIMUM GRADE WITHIN 75' OF INTERSECTIONS: 2.0% (2.0% PROPOSED)
PROPOSED CENTERLINE RADIUS: 150'
PROPOSED RADIUS OF RIGHT-OF-WAY ROUNDING: 25'
LENGTH OF RIGHT-OF-WAY: 245'±

## NOTES:

1. THE SOLE PURPOSE OF THIS PLAN SET IS TO COMPLY WITH SECTION 135-6.9.3 OF THE TOWN OF LEXINGTON ZONING BY LAW.
2. THE TOPOGRAPHY, SITE DETAIL & SURFACE IMPROVEMENTS DEPICTED HEREON WERE OBTAINED FROM AN ONSITE SURVEY PERFORMED BY RJ O'CONNELL & ASSOCIATES, INC.
3. THE SUBJECT PROPERTY DEPICTED IS LOCATED WITHIN THE RS ZONING DISTRICT.
4. THE SUBJECT PROPERTY IS DEPICTED AS LOT 49A ON THE TOWN OF LEXINGTON ASSESSOR'S MAP 41.
5. THIS PLAN DOES NOT SHOW ANY UNRECORDED OR UNWRITTEN EASEMENTS WHICH MAY EXIST.
6. THE LOCUS PROPERTY IS LOCATED IN FLOOD ZONE X (UNSHADED), AREAS DETERMINED TO BE OUTSIDE THE 0.2% ANNUAL CHANCE FLOODPLAIN, PER FEMA FLOOD INSURANCE RATE MAP NUMBER 25017C0403E DATED JUNE 4, 2010.

20 0 10 20 40
GRAPHIC SCALE IN FEET

REVISIONS

| DATE | DESCRIPTION | BY |
|---|---|---|
| | | |

COMMONWEALTH OF MASSACHUSETTS
MICHAEL J. NOVAK
CIVIL
No. 50696
REGISTERED PROFESSIONAL ENGINEER

# 75 OUTLOOK DRIVE
## GEOMETRIC PROOF PLAN
LOCATED IN
LEXINGTON, MASSACHUSETTS
(SOUTHERN MIDDLESEX COUNTY)
PREPARED FOR
**ALPH ECHO – 75 OUTLOOK, LLC.**

PATRIOT Engineering
35 BEDFORD STREET, SUITE 4
LEXINGTON, MASSACHUSETTS 02420
T: (978) 726-2654
www.patriot-eng.com

DESIGNED BY: M. CAPACHIETTI
CHECKED BY: M. NOVAK

DATE: 11/15/2021
SCALE: 1"=20'
SHEET No. SSD–10
PROJECT No. 21034